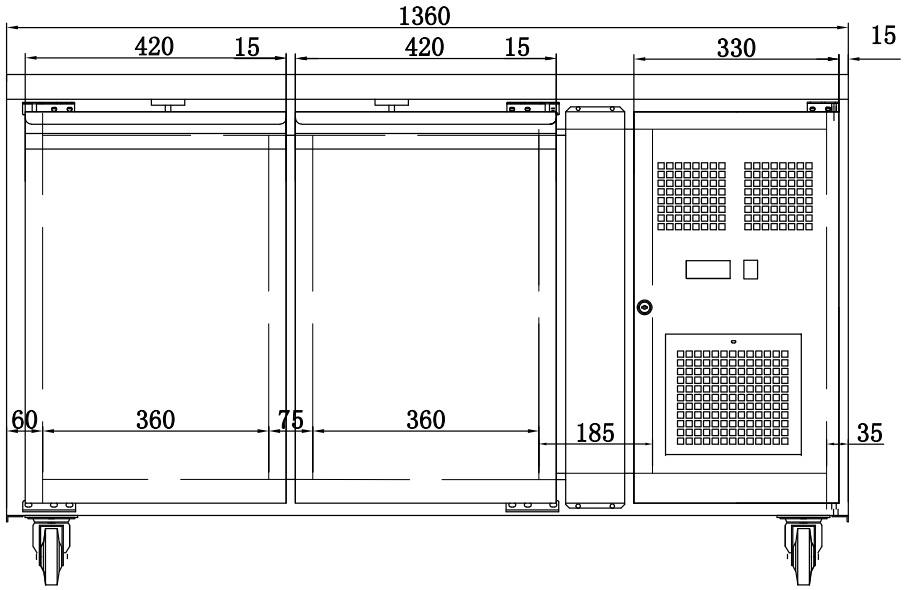

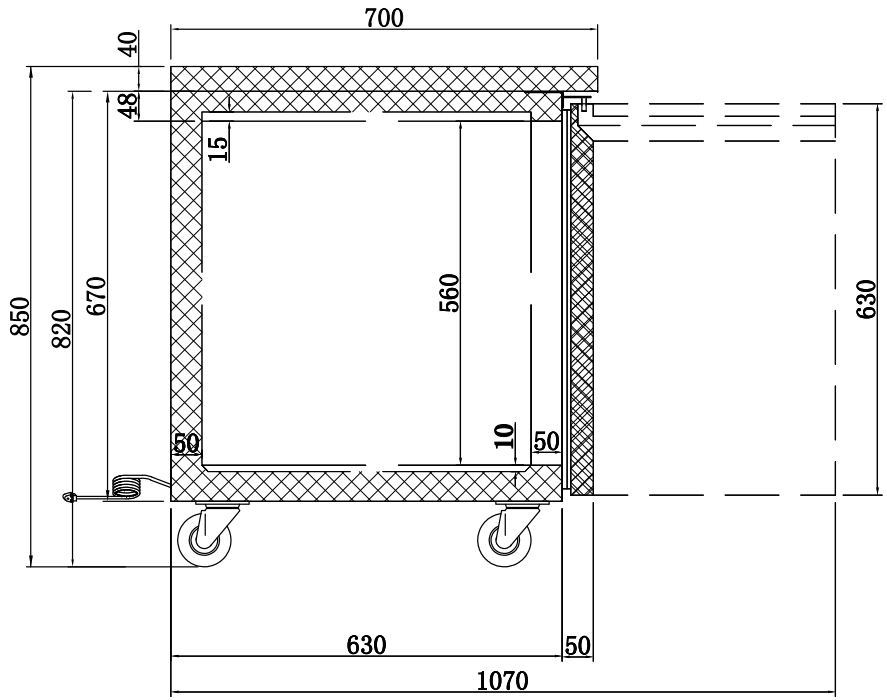

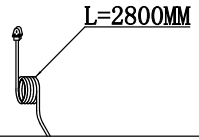

Drawn by:	SKU Code(s) UA047(G-UECX2100TN)
Date:30/05/2024	
Sheet:1	
Drawing Title Polar U-Series Double Door Counter Fridge - 282Ltr	
Status Revision	Rev.1