HOST

Hotel Room Refrigerator - 33 Ltr

Instruction manual

Model:

HT260



Read this instruction manual carefully before use

Safety Instructions

- Position on a flat, stable surface.
- A service agent/qualified technician should carry out installation and any repairs if required. Do not remove any components or service panels on this product.
- Consult Local and National Standards to comply with the following:
  - Health and Safety at Work Legislation
  - BS EN Codes of Practice
  - Fire Precautions
  - IEE Wiring Regulations
  - Building Regulations
- This appliance is intended to be used in household and similar applications such as
  - staff kitchen areas in shops, offices and other working environments;
  - farm houses and by clients in hotels, motels and other residential type environments;
  - bed and breakfast type environments;
  - catering and similar non-retail applications.
- DO NOT use jet/pressure washers to clean the unit.
- DO NOT allow oil or fat to come into contact with the plastic components or door seal. Clean immediately if contact occurs.
- DO NOT store products on top of the appliance.
- HOST Hotel Refrigerators are designed for drink chilling and storage and are not recommended for the storing of foodstuffs.
- Bottles that contain a high percentage of alcohol must be sealed and placed vertically in the refrigerator.
- Always carry, store and handle the appliance in a vertical position and move by holding the base of the appliance.
- Always switch off and disconnect the power supply to the unit before cleaning.
- Keep all packaging away from children. Dispose of the packaging in accordance with the regulations of local authorities.
- If the power cord is damaged, it must be replaced by a recommended qualified technician in order to avoid a hazard.

HT260_EN_A5_v1_20260724.indb 2 2026/7/24 09:38

- This appliance can be used by children aged from 8 years and above and persons with reduced physical, sensory or mental capabilities or lack of experience and knowledge if they have been given supervision or instruction concerning use of the appliance in a safe way and understand the hazards involved.
- Children shall not play with the appliance.
- Cleaning and user maintenance shall not be made by children without supervision.
- Children aged from 3 to 8 years are allowed to load and unload refrigerating appliances.
- HOST recommend that this appliance should be periodically tested (at least annually) by a Competent Person. Testing should include, but not be limited to: Visual Inspection, Polarity Test, Earth Continuity (Class I equipment), Insulation Continuity and Functional Test.
- HOST recommend that this product is connected to a circuit protected by an appropriate RCD (Residual Current Device).

Warning: Risk of Fire / flammable materials



- The refrigerant gas contained in this appliance is isobutene (R600a), which is low-polluting but flammable.
- Do not store explosive substances such as aerosol cans with a flammable propellant in this appliance.

Warning: Keep all ventilation openings clear of obstruction. Unit should not be boxed in without adequate ventilation.

- **Warning:** Do not use electrical appliances inside the drink storage compartments of the appliance.

Installation

Note: Not for use in vans or trailers, food trucks or similar vehicles.
Note: If the unit has not been stored or moved in an upright position, let it stand upright for approximately 12 hours before operation. If in doubt allow to stand.

Note: Before using the appliance for the first time, clean the shelves and interior with soapy water then dry well.
WARNING: When positioning the appliance, ensure the supply cord is not trapped or damaged.
WARNING: Do not locate multiple portable socket-outlets or portable power supplies at the rear of the appliance.

Remove the appliance from the packaging. Make sure that all protective plastic film and coatings are thoroughly removed from all surfaces.

1. Place the fridge on a surface that is strong enough to support its weight once fully loaded.

HT260_EN_A5_v1_20260724.indb 3 2026/7/24 09:38

2. Locate the fridge away from direct sunlight and heat sources (radiator, heater, etc.) as direct sunlight may affect the coating and heat sources may increase energy consumption.
3. Locate the fridge in the coolest area of the room.
4. Avoid locating the fridge in damp areas.
5. Avoid overloading the fridge. This might force the cooling system to run longer.
6. Reduce door openings. Try not to keep it open for long time and close as soon as possible.
7. Plug the fridge into a separate, properly grounded wall outlet. Any question concerning this subject should be directed toward a certified electrician.

When storing the fridge in a cabinet, please ensure to follow below ventilation instructions in order to prolong the life of it:

Cooling systems located at the back of the fridge require proper ventilation so that any heat it generates can dissipate. To do so adequate air circulation must be guaranteed. The air should enter from the underside of the fridge, go along the entire depth of the appliance getting to its cooling system and subsequently be evacuated through the outlet on the top.

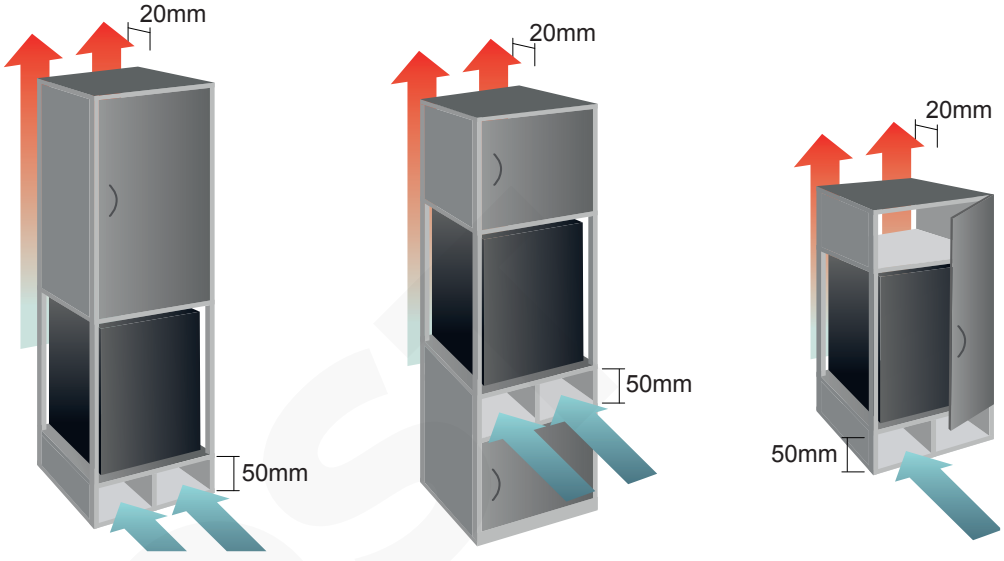

IMPORTANT: The fridge must be installed following the clearance indications below to provide proper heat evacuation. Failure to comply with these clearance spaces when installing the fridge can cause damage to electronic circuits as well as reduce cooling efficiency of the device and increase its daily energy consumption.

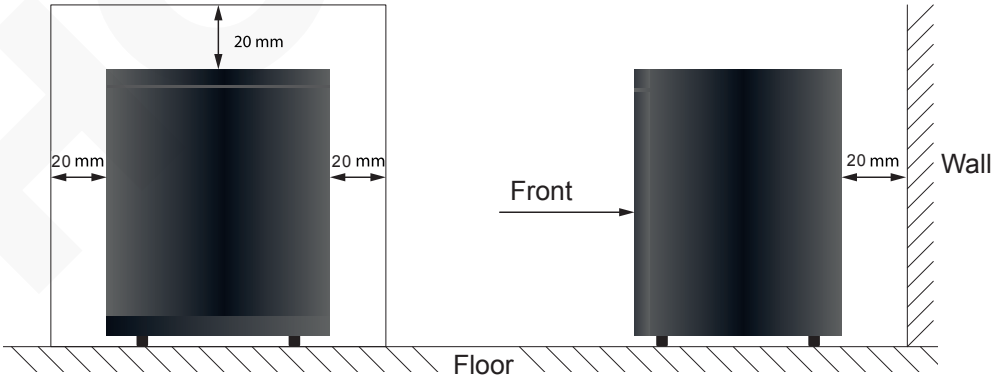

HT260_EN_A5_v1_20260724.indb 4 2026/7/24 09:38

Reversing the Door

The door is opened from left side originally. Depending on the location of the appliance, it may be necessary to change the direction the door opens.

1. Ensure the appliance is disconnected from the power supply.
2. Remove the hinge cover (1), screws (2) and upper hinge (3) from the right top.

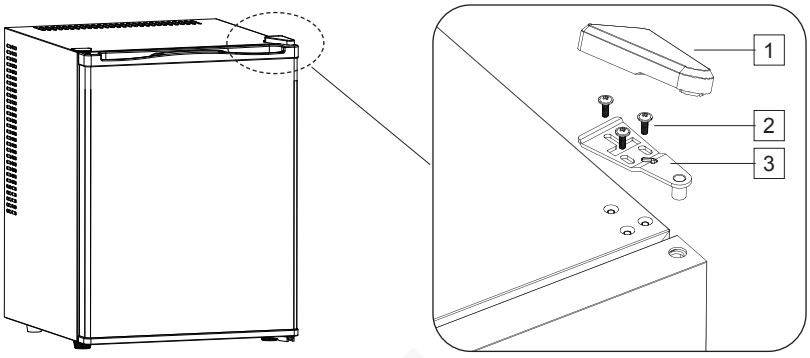

3. Lift the door upward to remove, then set it aside safely.

4. Remove the decoration cover (4) and cap (5) from the left top.

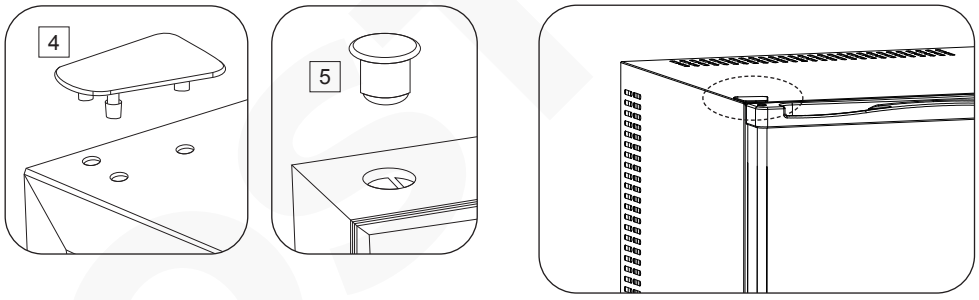

HT260_EN_A5_v1_20260724.indb 5 2026/7/24 09:38

5. Tilt the appliance back slightly and prop it securely. The appliance must not be tipped back by more than 45 degrees.

    - Remove the foot (6), screws (7) and lower hinge (8) from the right bottom.
    - Remove the screw foot (9) from the left bottom.
    - Fix the lower hinge (8) on the left bottom with screws (7), then mount the foot (6) in place.
    - Mount the screw foot (9) on the right bottom.
    - Return the appliance to the upright position. Hold the door and lower it onto the lower hinge.
    - Fix the upper hinge (3) on the left top with screws (2), then mount the hinge cover (1).

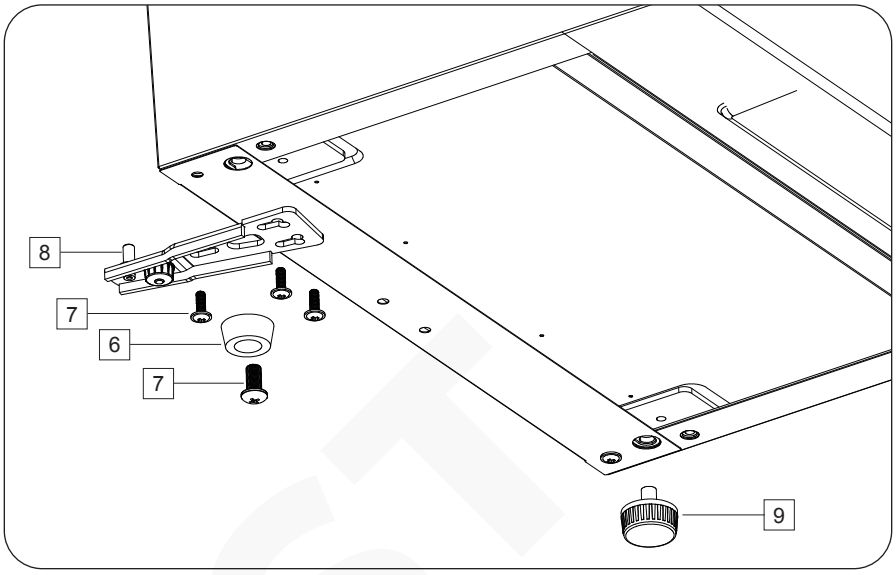

6. Mount the decoration cover (4) and cap (5) on the right top.
7. Check that the door is aligned vertically and horizontally to ensure proper opening and closing.

Hoshi

Operation

Controller

The controller is located on the ceiling of the cabinet.

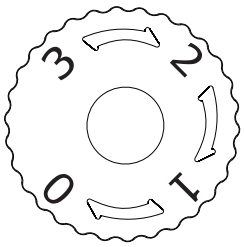

Setting	Description
0	Stop cooling
1	13°C - 18°C
2	8°C - 12°C
3	5°C - 7°C

Turn On

1. Set the controller to the desired setting.
2. Close the door of the appliance.
3. Connect the appliance to a mains power supply.

Most efficient use of the unit

- Shelf placement per factory mode below is highly recommended.

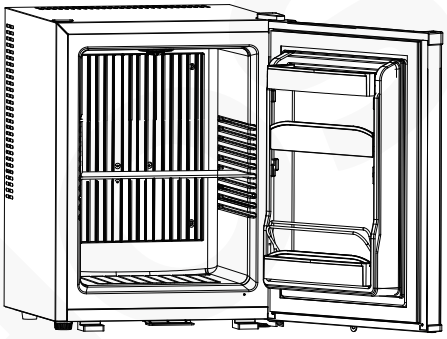

- When the surrounding temperature is 25°C and the fridge not loaded, it will take around 3.5 hours to decrease the internal temperature from 25°C to 12°C.
- Optimum temperature for storage is 12°C. The higher the setting temperature, the lower energy consumption, and vice versa.

Important:

- **The fridge will have better performance at ambient temperature 20-25°C. It is suggested to power it off when the ambient temperature is below 10°C.**
- **After plugged in, allow the unit to cool down for 2-3 hours before loading beverage inside.**
- **Ventilation is very important for this kind of thermoelectric fridge. Poor ventilation will lead to the damage on the inside PCB, reduce the unit's performance and life, and thus may invalidate your warranty.**
- **Auto Defrost: Periodically the appliance will run an automatic defrost cycle to prevent any ice build-up thus no need to defrost it manually.**

To avoid contamination of drink, please respect the following instructions:

- Opening the door for long periods can cause a significant increase of the temperature in the compartments of the appliance.
- If the refrigerating appliance is left empty for long periods, switch it off. Then defrost and clean it thoroughly. Let it dry well and leave the door open to prevent mould developing within the appliance.
- Clean regularly surfaces that can come in contact with drink and accessible drainage systems.

Refrigerating tips:

- Condensation and ice will form with frequent and prolonged opening of the doors.
- Operating outside of the recommend temperature range and placing next to a heat source will also increase the amount of ice and internal/external condensation. If external condensation occurs wipe the surface down with a cloth.
- Excessive ice will result in longer running times that will increase energy consumption and increase the deterioration of components.
- If the gasket or seal is damaged or deformed, energy consumption will increase. To restore efficiency, replace gasket.

HT260_EN_A5_v1_20260724.indb 7 2026/7/24 09:38

Cleaning, Care & Maintenance

- **Switch off and disconnect from the power supply before cleaning.**
- Clean the interior of the appliance as often as possible.
- Do not use abrasive cleaning agents. These can leave harmful residues.
- Clean the door seal with water only.
- Always wipe dry after cleaning.
- If left unused for any length of time, store the appliance with the door ajar.

Empty the drip tray on the back in time.

Manual defrost

In case of Ice built-up (3-5mm thick), empty the unit and disconnect from power supply. Leave the door open and manually defrost the appliance. Never use sharp objects for scraping.

Caution: Do not damage the refrigerant circuit.

Troubleshooting

A qualified technician must carry out repairs if required.

Fault	Probable Cause	Solution
The appliance is not working	The unit is not switched on	Check the unit is plugged in correctly and switched on
	Plug or power cord is damaged	Replace plug or lead
	Fuse in the plug has blown	Replace the fuse
	Mains power supply fault	Check mains power supply
Unit cabinet is not cold enough	Temperature set incorrectly	Check temperature and reset if necessary
	External environment may require colder temperature	Check temperature and reset if necessary
	The door is opened too often	Only open when necessary
	Door seal is worn	Consult a qualified technician
Door will not close properly	Appliance is not level	Check installation position and change if necessary
	Shelves are out of position	Check shelves are properly inserted
	Door seal is dirty	Wipe clean with a damp cloth
The appliance is noisy	Loose nut/screw	Check and tighten all nuts and screws
	The appliance has not been installed in a level or stable position	Check installation position and change if necessary

Service

Should your appliance have a fault, please visit the Service section of the HOST website:

https://www.host-appliances.com/repairs

HT260_EN_A5_v1_20260724.indb 8 2026/7/24 09:38

Technical Specifications

Note: Due to our continuous improvement process, the product specifications are subject to change without notice.

Model	Voltage	Power	Current	Temperature Range	Net usable Capacity	Refrigerant
HT260	220-240V~ 50/60Hz	58W	0.6A	5°C - 18°C	33 Ltr	R600a 25g

Dimensions H x W x D mm	Net Weight	Climate Class	Max load of the shelf
546 x 402 x 431	11.5kg	N	3kg

Note: For optimal product performance and efficiency, please ensure to mind the net usable capacity (load limit) when filling.

Impact of temperature settings on food waste:
In order to reduce food waste from decomposition or dehydration, this appliance should be operated in its designated operating range.

Optimum temperature for drink storage: 12°C

Optimum ambient temperature and humidity:
This appliance is intended to be used at ambient temperatures ranging from 16°C to 32°C.

Ambient temp / Setting	16°C	25°C	32°C
1	15°C	15°C	15°C
2	10°C	10°C	10°C
3	5°C	5°C	8°C

This appliance is intended to operate in climate where the maximum humidity is 75%.

To order spare parts, please visit the link below then type the relative item code and Spares:

www.host-appliances.com

Minimum period of spares parts to be available:

Door handles, door hinges, trays and baskets will be made available for a minimum of seven years after the last unit of the model is placed on the market. A further selection of technical spares will also be available to Professional users for a minimum of seven years. Door gaskets will be made available for a minimum of 10 years.

Model information can be found on the product:

The Model Identifier can usually be found on the inside wall and on the reverse of the unit.

HT260_EN_A5_v1_20260724.indb 9 2026/7/24 09:38

Electrical Wiring

The appliance is supplied with a plug as per the below table (the correct current to be selected depending on the appliance).

Region	Plug standard	Current rating(s)
UK	BS 1363	13A

The plug is to be connected to a suitable mains socket.

This appliance must be earthed.



If in doubt consult a qualified electrician.

Electrical isolation points must be kept clear of any obstructions. In the event of any emergency disconnection being required they must be readily accessible.

Disposal

EU regulations require refrigeration product to be disposed of by specialist companies who remove or recycle all gasses, metal and plastic components.

Consult your local waste collection authority regarding disposal of your appliance. Local authorities are not obliged to dispose of commercial refrigeration equipment but may be able to offer advice on how to dispose of the equipment locally.

Compliance

The WEEE logo on this product or its documentation indicates that the product must not be disposed of as household waste. To help prevent possible harm to human health and/or the environment, the product must be disposed of in an approved and environmentally safe recycling process. For further information on how to dispose of this product correctly, contact the product supplier, or the local authority responsible for waste disposal in your area.



HOST parts have undergone strict product testing in order to comply with regulatory standards and specifications set by international, independent, and federal authorities.

HOST products have been approved to carry the following symbol:



All rights reserved. No part of these instructions may be produced or transmitted in any form or by any means, electronic, mechanical, photocopying, recording or otherwise, without the prior written permission of HOST.
Every effort is made to ensure all details are correct at the time of going to press, however, HOST reserve the right to change specifications without notice.

HT260_EN_A5_v1_20260724.indb 10 2026/7/24 09:38

HOST Declaration of Conformity

We {Host} of {Host House, Newhouse Farm Industrial Estate, Mathern, Chepstow, NP16 6UP} hereby declare that the equipment is in conformity with the requirements of the following Regulations:

- Low Voltage Directive (LVD) - 2014/35/EU
  Electrical Equipment (Safety) Regulations 2016
- Electro-Magnetic Compatibility (EMC) Directive 2014/30/EU - recast of 2004/108/EC
  Electromagnetic Compatibility Regulations 2016 (S.I. 2016/1091)
- Restriction of Hazardous Substances Directive (RoHS) 2015/863 amending Annex II to Directive 2011/65/EU
  The Restriction of the Use of Certain Hazardous Substances in Electrical and Electronic Equipment Regulations 2012 (S.I. 2012/3032)
- Regulation (EC) No 1935/2004- Food Contact Materials (FCM)
  Regulation (EC) No 1935/2004 on Materials and Articles intended to Come into Contact with Food

We hereby declare that:
Equipment Model number:

HT260 Hotel Room Refrigerator - 33Ltr

is in conformity with the applicable requirements of the following documents:

Ref. No.	Edition/date
EN 60335-1	2012 +A11:2014 +A13:2017 +A1:2019 +A14:2019 +A2:2019 +A15:2021 +A16:2023
EN IEC 60335-2-24	2022 +A11:2022
EN 62233	2008
EN IEC 55014-1	2021
EN IEC 55014-2	2021
EN IEC 61000-3-2	2019 +A1:2021
EN 61000-3-3	2013 +A1:2019 +A2:2021

I hereby declare that the equipment named above has been designed to comply with the relevant sections of the above referenced specifications and is in accordance with the requirements of the Regulations:

Signed by:

Signed by:
Ashley Hooper
AB6DB7656FFB441...

Full Name Ashley Hooper
Title: Group Head of Product Quality & Compliance
Location: Bristol, United Kingdom
Date: 10TH Jul 2026



www.host-appliances.com

HT260_EN_A5_v1_2026/07/24