FRIFRI PROFI 8 ELECTRIC COUNTER-TOP SINGLE TANK FRYER - 1 BASKET - W 360 MM - 6.9 KW

MODEL: 650947

Fry delicious food precisely with the powerful FriFri 6.9kW Profi+ 8 Counter Top Fryer. Sturdy and safe, the fryer's stainless steel tank has the capacity to produce 22kg of perfectly fried chips per hour, while there's also a rear-mounted slot-in lid that also acts as a splashback and basket support. The Profi+8 boasts the kind of quality that customers have come to expect from the FriFri brand for over 70 years.

AIA FILE NUMBER:

ITEM NUMBER:

PRODUCT OPTIONS AND ACCESSORIES

- FZ101010 BASKET FOR PROFI / FRITA+ 8 - WITHOUT HANDLE

PRODUCT FEATURES

- A powerful counter top fryer capable of producing 22 Kg of chips per hour
- Highly responsive digital electronic control able to maintain oil to +/-1 °C of the temperature selected
- Enhanced operator safety with front mounted control panel
- Rear-mounted slot-in lid that also acts as a splashback and basket support
- Safe and easy to use front valve for draining off used oil
- One piece pressed stainless steel tank with rounded corners for increased durability and reduced cleaning times

FRIFRI PROFI 8 ELECTRIC COUNTER-TOP SINGLE TANK FRYER - 1 BASKET - W 360 MM - 6.9 KW

MODEL: 650947

WEIGHTS & DIMENSIONS

Width	360 mm
Depth	475 mm
Height	455 mm
Weight	13 kg

SHIPPING DETAILS

Ship Width	61 cm
Ship Depth	40 cm
Ship Height	37 cm
Ship Weight	14.3 kg
Number of Shipment Parcels	1
Ship Method	Small Parcel (FedEx, UPS, DHL)
Shipping Package Type	Pieces
Shipping Origin Zip Code	LN6 3QZ, UNITED KINGDOM
Quick Ship Product	No

PRODUCT CERTIFICATIONS

Made in UK UKCA IP25

ENERGY SPECS

Primary Energy Type	Electric
Electrical Amps Per Conductor	L1=10.0; L2=10.0; L3=10.0
Electrical Total Amperage	30 A
Electrical Volts	400V
Electrical Total Wattage	6900 W
Electrical Kilowatts	6.9 kW

Electrical Phase	3-Phase
Electrical Plug Type	Hardwired
Number of Electrical Plugs	Not Applicable
Electrical Connection Type	Direct Hardwired
Number of Electrical Conductor Wires	1
Dedicated Circuit Required	Yes
Electrical Remarks	Three

ADDITIONAL SPECIFICATIONS

Auto Oil Top-Off	No
Basket Lift Type	Not Applicable
Control Type	Rotary Control Knob
Food Production Rate	22kg fries - 7mm [frozen]
Fryer Type	Open Pot
Integrated Filtration	No
Number of Baskets	1
Number of Vats (batteries)	1

Total Oil Capacity (volume)	19 l
Oil Reclamation	No
Oil Temperature Control	Electronic
Pumped Oil Filtration	No
Split Pot	No
Temperature Maximum	190 °C
Temperature Minimum	150 °C
Vat 1 Oil Capacity (volume)	19 l

FriFri reserves the right to modify specifications or discontinue models without incurring obligation. Dimensions nominal.

Document Auto-Generated
October 30, 2024

FRIFRI PROFI 8 ELECTRIC COUNTER-TOP SINGLE TANK FRYER - 1 BASKET - W 360 MM - 6.9 KW

MODEL: 650947

BIDDING SPECIFICATIONS

Bidding Specifications Not Available.

TECHNICAL DRAWING

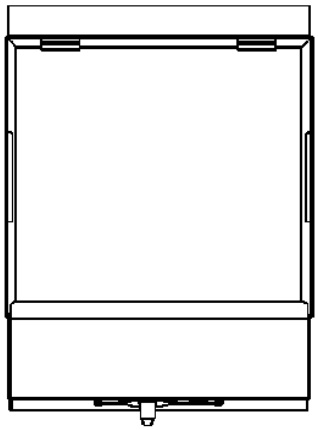

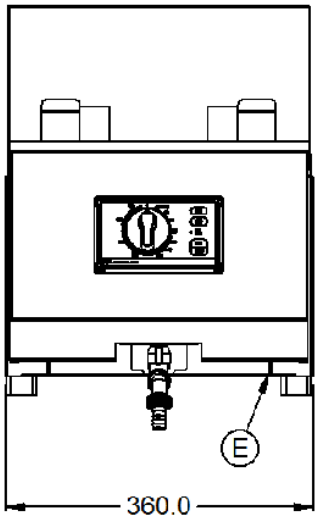

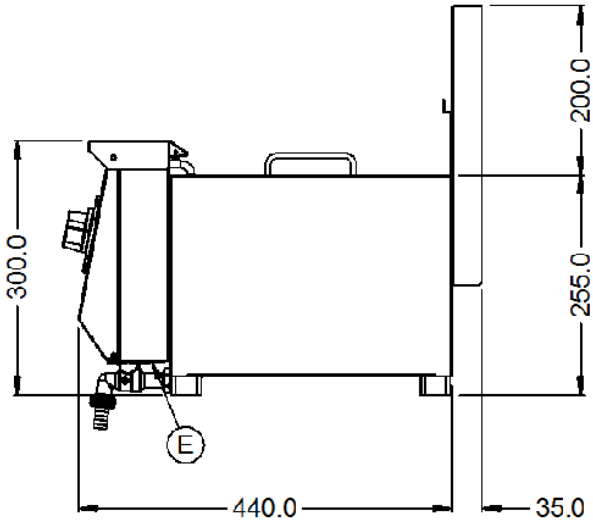

FriFri reserves the right to modify specifications or discontinue models without incurring obligation. Dimensions nominal.

Document Auto-Generated
October 30, 2024