FRIFRI SUPER EASY 633 ELECTRIC FREE-STANDING TRIPLE TANK FRYER WITHOUT FILTRATION - 3 BASKETS - W 600 MM - 33.0 KW - THREE PHASE

MODEL: SL633H31N0

AIA FILE NUMBER:

ITEM NUMBER:

When budget is a primary consideration, FriFri's unrivalled credentials, know-how and quality are still well within your reach. A free standing Super Easy 633 offers outstanding value with no compromise in quality or performance.

PRODUCT FEATURES

- Outstanding quality with no compromise in quality or performance.
- Mechanical thermostat maintains oil to within +/-8 °C of the temperature selected.
- Low watts density element with a large surface area in contact with the oil for fast recovery time and to prevent scorching which degrades oil.
- Keeping your oil in peak condition! Integral gravity filtration extends oil life by up to 75% saving you money on oil purchase and disposal costs. Optional xFri© filters the oil at the push of a button and returns oil to the tank. Filter the oil safely, even while it's still hot, mid service if necessary, and resume frying in minutes – so easy there is no excuse not to!
- Pressed tank for strength and durability. Radiused corners for easy cleaning. Hinged elements with two tilt positions for draining and cleaning.
- Optimum Allergy Control. Supplied with separate oil buckets, and can be supplied with separate pumped filtration systems, providing completely segregated gravity filtration for optimum allergen control or to cater for dietary preferences.
- Single phase.

FRIFRI SUPER EASY 633 ELECTRIC FREE-STANDING TRIPLE TANK FRYER WITHOUT FILTRATION - 3 BASKETS - W 600 MM - 33.0 KW -

MODEL: SL633H31N0

WEIGHTS & DIMENSIONS

Width	592 mil
Depth	650 mil
Height	986 mil
Weight	98.5 kg

SHIPPING DETAILS

Ship Width	79 cm
Ship Depth	72 cm
Ship Height	113 cm
Ship Weight	87.45 kg
Number of Shipment Parcels	1
Ship Method	LTL Common Carrier
Shipping Package Type	Pieces
Shipping Origin Zip Code	LN6 3QZ, UNITED KINGDOM
Quick Ship Product	No

PRODUCT CERTIFICATIONS

Made in UK UK CA IPX4

ENERGY SPECS

Primary Energy Type	Electric
Electrical Amps Per Conductor	L1=47.8; L2=47.8; L3=47.8
Electrical Total Amperage	143.4 A
Electrical Volts	400V
Electrical Total Wattage	33000 W
Electrical Kilowatts	33 kW
Electrical Phase	3-Phase
Electrical Plug Type	Hardwired
Number of Electrical Plugs	Not Applicable
Electrical Connection Type	Direct Hardwired
Number of Electrical Conductor Wires	1
Electrical Remarks	Three

ADDITIONAL SPECIFICATIONS

Auto Oil Top-Off	No
Basket Lift Type	Not Applicable
Construction Remarks	Stainless Steel Grade 304
Control Type	Rotary Control Knob
Food Production Rate	3 x 20kg fries - 7mm [frozen]
Fryer Type	Open Pot
Integrated Filtration	No
Number of Baskets	1
Number of Vats (batteries)	3
Total Oil Capacity (volume)	18 l
Oil Reclamation	No
Oil Temperature Control	Mechanical
Pumped Oil Filtration	No
Split Pot	Yes
Temperature Maximum	190 °C
Temperature Minimum	90 °C
Vat 1 Oil Capacity (volume)	6 l
Vat 2 Oil Capacity (volume)	6 l
Vat 3 Oil Capacity (volume)	6 l

FriFri reserves the right to modify specifications or discontinue models without incurring obligation. Dimensions nominal.

Document Auto-Generated
October 30, 2024

FRIFRI SUPER EASY 633 ELECTRIC FREE-STANDING TRIPLE TANK FRYER WITHOUT FILTRATION - 3 BASKETS - W 600 MM - 33.0 KW -

MODEL: SL633H31N0

BIDDING SPECIFICATIONS

Bidding Specifications Not Available.

TECHNICAL DRAWING

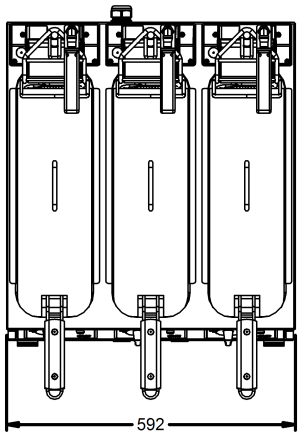

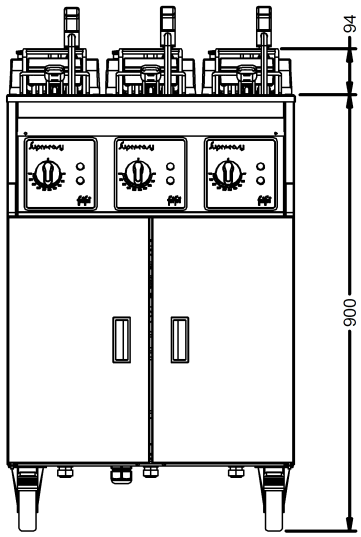

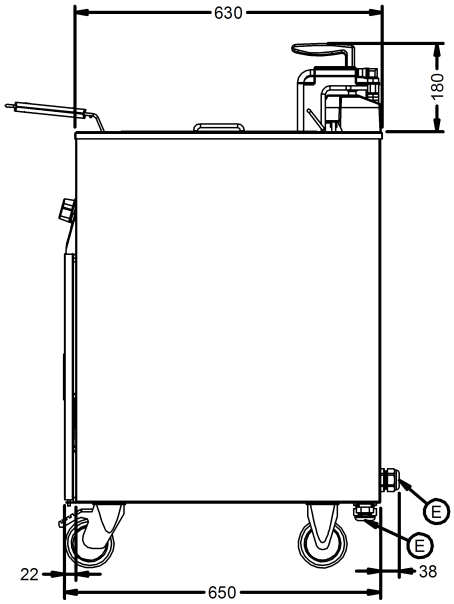

FriFri reserves the right to modify specifications or discontinue models without incurring obligation. Dimensions nominal.

Document Auto-Generated
October 30, 2024