FRIFRI TOUCH 633 ELECTRIC FREE-STANDING TRIPLE TANK FRYER - 3 BASKETS - W 600 MM - 3 X 7.5 KW - THREE PHASE

MODEL: TL633L33G0

AIA FILE NUMBER:

ITEM NUMBER:

Touch

For those who run the busiest professional kitchens and refuse to compromise on quality, a Touch 633 is your newest kitchen assistant, helping you to deliver quality results every time.

PRODUCT FEATURES

- 24 one-touch icon-driven menu items, meaning regardless of the operator, at one touch deliver precisely the same results every time.
- Are there more fries than last time? Adaptive cooking automatically adjusts the cooking times to suit your batch size ensuring you never serve under-cooked food.
- The 4.3" QPad is intuitive, easy to use, and provides the wider functionality that only a touch screen can deliver.
- Easy-View Traffic Light Status — ColourCue. Great for busy and noisy kitchens, ColourCue shows you the status of your fryer at a glance: red - attention required such as unloading; amber – pre-heating; green - ready to fry.
- Understand your energy usage. Customise the eco settings by temperature to suit your operation. View where you can make savings with a detailed analysis of the fryer's energy usage over the last 8 hours, 24 hours, 7 days, and 28 days.
- Keeping your oil in peak condition! FriFri Oil Assistant and optional xFri© to easily monitor the condition of oil with the onscreen oil status. When prompted filter the oil even while it's still hot, mid-service if necessary, and resume frying in under five minutes. It is so quick and easy that there is no excuse not to!
- Raising food to the next level. Perfect for kitchens where you don't have time for constant supervision, the optional LiftFri© automatic basket lifting system lifts food at the end of the cycle to prevent overcooking.
- Pressed tank for strength and durability. Radiused corners for easy cleaning. Hinged elements with two tilt positions for draining and

FRIFRI TOUCH 633 ELECTRIC FREE-STANDING TRIPLE TANK FRYER - 3 BASKETS - W 600 MM - 3 X 7.5 KW - THREE PHASE

MODEL: TL633L33G0

WEIGHTS & DIMENSIONS

Width	592 mil
Depth	650 mil
Height	994 mil
Weight	98.5 kg

SHIPPING DETAILS

Ship Width	79 cm
Ship Depth	79 cm
Ship Height	113 cm
Ship Weight	107.57 kg
Number of Shipment Parcels	1
Ship Method	LTL Common Carrier
Shipping Package Type	Pieces
Shipping Origin Zip Code	LN6 3QZ, UNITED KINGDOM
Quick Ship Product	No

PRODUCT CERTIFICATIONS

Made in UK UK CA IPX4

ENERGY SPECS

Primary Energy Type	Electric
Electrical Amps Per Conductor	L1=3 x 10.9; L2=3 x 10.9; L3=3 x 10.9
Electrical Total Amperage	98.1 A
Electrical Volts	400V
Electrical Total Wattage	22500 W
Electrical Kilowatts	22.5 kW

Electrical Phase	3-Phase
Electrical Plug Type	Hardwired
Number of Electrical Plugs	Not Applicable
Electrical Connection Type	Direct Hardwired
Number of Electrical Conductor Wires	3
Electrical Remarks	Three

FriFri reserves the right to modify specifications or discontinue models without incurring obligation. Dimensions nominal.

Document Auto-Generated
October 30, 2024

FRIFRI TOUCH 633 ELECTRIC FREE-STANDING TRIPLE TANK FRYER - 3 BASKETS - W 600 MM - 3 X 7.5 KW - THREE PHASE

MODEL: TL633L33G0

ADDITIONAL SPECIFICATIONS

Auto Oil Top-Off	No
Basket Lift Type	Optional
Construction Remarks	Stainless Steel Grade 304
Control Type	Touchscreen
Filter Media Type (if applicable)	2-Stage: Fine Tissue Filter and Stainless Steel Filter
Food Production Rate	3 x 18kg fries - 7mm [frozen]
Fryer Type	Open Pot
Integrated Filtration	Yes
Number of Baskets	3
Number of Vats (batteries)	3
Total Oil Capacity (volume)	18 l
Oil Reclamation	No
Oil Temperature Control	Electronic
Pumped Oil Filtration	Optional
Split Pot	Yes
Temperature Maximum	190 °C
Temperature Minimum	40 °C
Vat 1 Oil Capacity (volume)	6 l
Vat 2 Oil Capacity (volume)	6 l
Vat 3 Oil Capacity (volume)	6 l

BIDDING SPECIFICATIONS

Bidding Specifications Not Available.

FriFri reserves the right to modify specifications or discontinue models without incurring obligation. Dimensions nominal.

Document Auto-Generated
October 30, 2024

FRIFRI TOUCH 633 ELECTRIC FREE-STANDING TRIPLE TANK FRYER - 3 BASKETS - W 600 MM - 3 X 7.5 KW - THREE PHASE

MODEL: TL633L33G0

TECHNICAL DRAWING

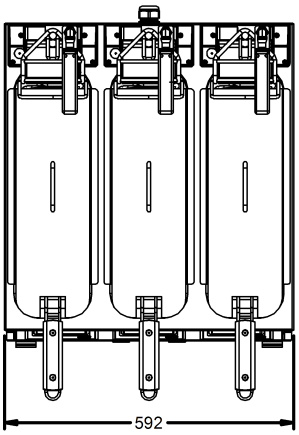

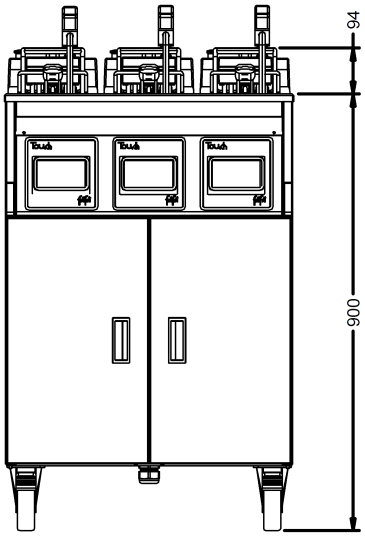

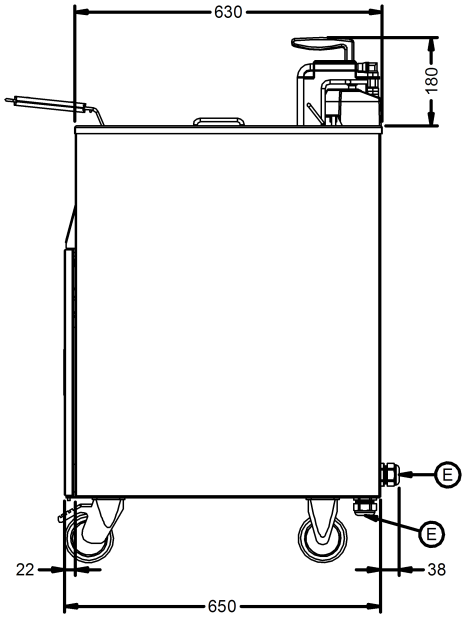

FriFri reserves the right to modify specifications or discontinue models without incurring obligation. Dimensions nominal.

Document Auto-Generated
October 30, 2024