LINCAT SILVERLINK ELECTRIC COUNTER-TOP SINGLE TANK FRYER - 3 BASKETS - W 600 MM - 6.0 KW

MODEL: DF66/ST

AIA FILE NUMBER:

ITEM NUMBER:

SILVERLINK 600

Fry perfectly crispy and fluffy chips every time with the Silverlink 600 Electric Single Tank Counter Top Fryer. Ideal for mobile operations and a range of venues such as cafes, pubs and restaurants, the fryer comes with three baskets for greater versatility, combined with a power that can deliver 26kg of chips per hour. Sturdy stainless steel means it's built to last, hinged elements give easy access during cleaning, and you're in control via the accurate thermostat throughout the cooking process. Then there's the innovative deep cool zone, which collects cooking debris to prolong the life of the oil and therefore save you money.

PRODUCT OPTIONS AND ACCESSORIES

- BA96 BASKET SPUN DFSMALL
- CC6 Lincat Silverlink 600 Free-standing Ambient Open-Top Pedestal with Doors - W 600 mm
- CN6 Lincat Silverlink 600 Free-standing Ambient Open-Top Pedestal without Doors - W 600 mm
- SLS6 Lincat Silverlink 600 Free-standing Floor Stand - for units W 600 mm
- HC6 Lincat Silverlink 600 Free-standing Heated Open-Top Pedestal with Doors - W 600 mm - 0.5 kW
- HCL6 Lincat Silverlink 600 Free-standing Heated Pedestal with Legs and Doors - W 600 mm - 0.5 kW

PRODUCT FEATURES

- Single tank fryer with three baskets giving you the flexibility to cook different foods or loads simultaneously, delivering 26kg of chips per hour
- Front mounted controls for safety
- Hinged elements to give easy access during cleaning
- Cool zone collects cooking debris - gives cleaner cooking results and saves money by prolonging the life of the oil
- Thermostatically controlled to give accurate cooking temperatures throughout cooking. Fail-safe top temperature cut out ensures safe operation.
- Fully moulded 304 stainless steel tank and heavy duty nickel plated baskets for the most demanding of operations
- Front drain off tap for easy removal of cooking oil

LINCAT SILVERLINK ELECTRIC COUNTER-TOP SINGLE TANK FRYER - 3 BASKETS - W 600 MM - 6.0 KW

MODEL: DF66/ST

WEIGHTS & DIMENSIONS

Width	600 mil
Depth	632 mil
Height	330 mil
Weight	22 kg

SHIPPING DETAILS

Ship Width	70 cm
Ship Depth	70 cm
Ship Height	49.5 cm
Ship Weight	24.2 kg
Number of Shipment Parcels	1
Ship Method	Small Parcel (FedEx, UPS, DHL)
Shipping Package Type	Pieces
Shipping Origin Zip Code	LN6 3QZ, UNITED KINGDOM
Quick Ship Product	No

PRODUCT CERTIFICATIONS

Made in UK UKCA IP33

ENERGY SPECS

Primary Energy Type	Electric
Electrical Amps Per Conductor	Single Phase 26/Three Phase L1=13.0; L2=13.0; L3=N/
Electrical Total Amperage	26 A
Electrical Volts	230-400V
Electrical Total Wattage	6000 W
Electrical Kilowatts	6 kW
Electrical Plug Type	Hardwired
Number of Electrical Plugs	Not Applicable
Electrical Connection Type	Direct Hardwired
Number of Electrical Conductor Wires	1
Dedicated Circuit Required	Yes
Electrical Remarks	Single,Three

ADDITIONAL SPECIFICATIONS

Auto Oil Top-Off	No
Basket Lift Type	Not Applicable
Control Type	Rotary Control Knob
Food Production Rate	18kg chips - 12mm [frozen], 26kg chips - 12mm [chilled] per hour
Fryer Type	Open Pot
Integrated Filtration	No
Number of Baskets	3
Number of Vats (batteries)	1
Total Oil Capacity (volume)	20 l
Oil Reclamation	No
Oil Temperature Control	Mechanical
Pumped Oil Filtration	No
Split Pot	No
Temperature Maximum	190 °C
Temperature Minimum	130 °C
Vat 1 Oil Capacity (volume)	20 l

Lincat reserves the right to modify specifications or discontinue models without incurring obligation. Dimensions nominal.

Document Auto-Generated
October 30, 2024

LINCAT SILVERLINK ELECTRIC COUNTER-TOP SINGLE TANK FRYER - 3 BASKETS - W 600 MM - 6.0 KW

MODEL: DF66/ST

BIDDING SPECIFICATIONS

Bidding Specifications Not Available.

TECHNICAL DRAWING

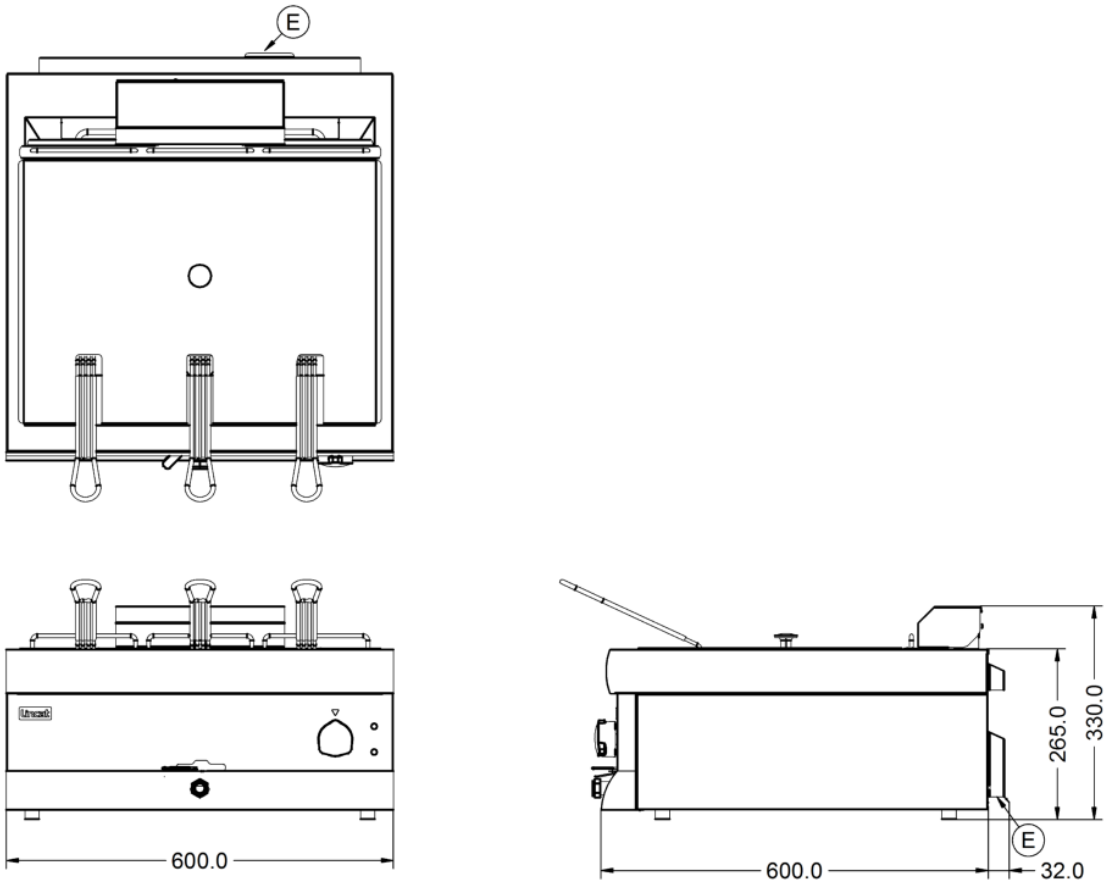

Lincat reserves the right to modify specifications or discontinue models without incurring obligation. Dimensions nominal.

Document Auto-Generated
October 30, 2024