LINCAT SILVERLINK ELECTRIC COUNTER-TOP SINGLE TANK FRYER - 1 BASKET - W 300 MM - 9.0 KW

MODEL: DF39

SILVERLINK 600

Deliver perfectly crisp on the outside and fluffy on the inside chips time after time with the Silverlink 600 Free Standing Electric Fryer. Two independently operated fryer tanks means you have greater versatility while cooking, with a power that delivers 52kg of chips an hour. Ideal for cafes, pubs and restaurants, the fryer is built from sturdy stainless steel, while the heavy duty nickel plated baskets are designed for the most demanding of operations. You're in control via the accurate thermostat throughout the entire cooking process, and hinged elements give easy access during cleaning. Then there's the innovative deep cool zone, which collects cooking debris to prolong the life of the oil and therefore save you money.

AIA FILE NUMBER:

ITEM NUMBER:

PRODUCT OPTIONS AND ACCESSORIES

- BA96 BASKET SPUN DFSMALL
- CC3 Lincat Silverlink 600 Free-standing Ambient Open-Top Pedestal with Doors - W 300 mm
- CN3 Lincat Silverlink 600 Free-standing Ambient Open-Top Pedestal without Doors - W 300 mm
- SLS3 Lincat Silverlink 600 Free-standing Floor Stand - for units W 300 mm
- HC3 Lincat Silverlink 600 Free-standing Heated Open-Top Pedestal with Doors - W 300 mm - 0.25 kW
- HCL3 Lincat Silverlink 600 Free-standing Heated Pedestal with Legs and Doors - W 300 mm - 0.25 kW

PRODUCT FEATURES

- Two independently operated fryer tanks for greater versatility, delivers 52kg of chips per hour
- Front mounted controls for safety
- Hinged elements to give easy access during cleaning
- Cool zone collects cooking debris - gives cleaner cooking results and saves money by prolonging the life of the oil
- Thermostatically controlled to give accurate cooking temperatures throughout cooking
- Fully moulded 304 stainless steel tank and heavy duty nickel plated baskets for the most demanding of operations
- Front drain off tap for easy removal of cooking oil

LINCAT SILVERLINK ELECTRIC COUNTER-TOP SINGLE TANK FRYER - 1 BASKET - W 300 MM - 9.0 KW

MODEL: DF39

WEIGHTS & DIMENSIONS

Width	300 mil
Depth	632 mil
Height	330 mil
Weight	14.6 kg

SHIPPING DETAILS

Ship Width	70 cm
Ship Depth	40 cm
Ship Height	49.5 cm
Ship Weight	16.06 kg
Number of Shipment Parcels	1
Ship Method	Small Parcel (FedEx, UPS, DHL)
Shipping Package Type	Pieces
Shipping Origin Zip Code	LN6 3QZ, UNITED KINGDOM
Quick Ship Product	No

PRODUCT CERTIFICATIONS

Made in UK UKCA IP33

ENERGY SPECS

Primary Energy Type	Electric
Electrical Amps Per Conductor	Single Phase 39/Three Phase L1=13.0; L2=13.0; L3=13.0
Electrical Total Amperage	39 A
Electrical Volts	230-400V
Electrical Total Wattage	9000 W
Electrical Kilowatts	9 kW

Electrical Plug Type	Hardwired
Number of Electrical Plugs	Not Applicable
Electrical Connection Type	Direct Hardwired
Number of Electrical Conductor Wires	1
Dedicated Circuit Required	Yes
Electrical Remarks	Single,Three

ADDITIONAL SPECIFICATIONS

Auto Oil Top-Off	No
Basket Lift Type	Not Applicable
Control Type	Rotary Control Knob
Food Production Rate	26kg chips - 12mm [frozen], 30kg chips - 12mm [chilled] per hour
Fryer Type	Open Pot
Integrated Filtration	No
Number of Baskets	1

Number of Vats (batteries)	1
Total Oil Capacity (volume)	9 l
Oil Reclamation	No
Oil Temperature Control	Mechanical
Pumped Oil Filtration	No
Split Pot	No
Temperature Maximum	190 °C
Temperature Minimum	130 °C
Vat 1 Oil Capacity (volume)	9 l

Lincat reserves the right to modify specifications or discontinue models without incurring obligation. Dimensions nominal.

Document Auto-Generated
October 30, 2024

LINCAT SILVERLINK ELECTRIC COUNTER-TOP SINGLE TANK FRYER - 1 BASKET - W 300 MM - 9.0 KW

MODEL: DF39

BIDDING SPECIFICATIONS

Bidding Specifications Not Available.

TECHNICAL DRAWING

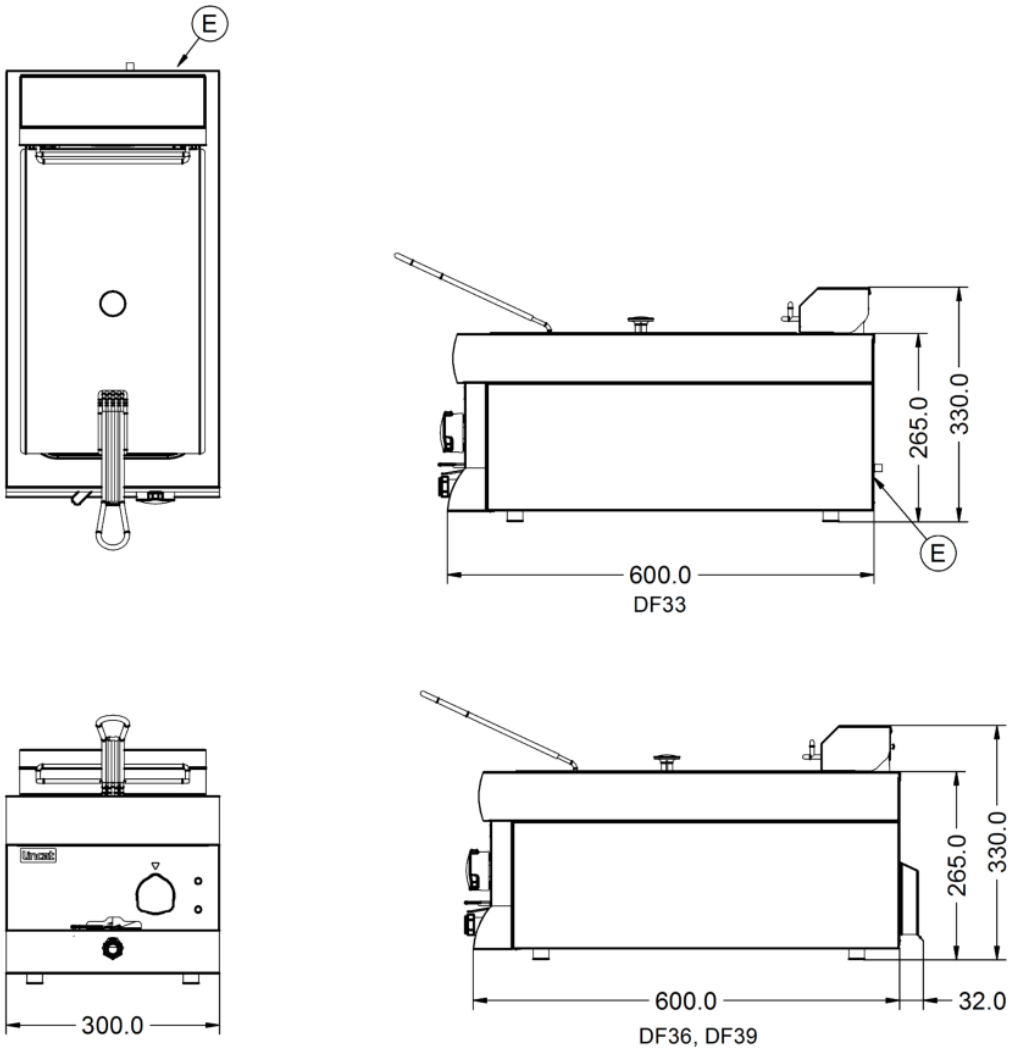

Lincat reserves the right to modify specifications or discontinue models without incurring obligation. Dimensions nominal.

Document Auto-Generated
October 30, 2024