# LINCAT SILVERLINK ELECTRIC COUNTER-TOP BAIN MARIE - WET HEAT - GASTRONORMS - BASE ONLY - W 600 MM - 2.0 KW

# MODEL: BM6W

AIA FILE NUMBER:

ITEM NUMBER:

SILVERLINK 600

Do you need to safely hold sauces, soups, gravy and precooked foods for up to two hours at the ideal serving temperature? This Silverlink 600 Electric Wet Heat Bain Marie does just that. Perfect for takeaways, restaurants and mobile caterers, the unit, which can also be used as a dry bain marie, is designed to plug in and play so you'll be serving delicious dishes in no time. It also comes with an adjustable temperature control.

## PRODUCT OPTIONS AND ACCESSORIES

- CC6 Lincat Silverlink 600 Free-standing Ambient Open-Top Pedestal with Doors - W 600 mm
- CN6 Lincat Silverlink 600 Free-standing Ambient Open-Top Pedestal without Doors - W 600 mm
- SLS6 Lincat Silverlink 600 Free-standing Floor Stand - for units W 600 mm
- HC6 Lincat Silverlink 600 Free-standing Heated Open-Top Pedestal with Doors - W 600 mm - 0.5 kW
- HCL6 Lincat Silverlink 600 Free-standing Heated Pedestal with Legs and Doors - W 600 mm - 0.5 kW

## PRODUCT FEATURES

- Wet heat bain marie
- Ideal for holding foods for up to 2 hours at serving temperature
- Base unit only supplied empty no gastronorms included
- This wet unit can also be used as a dry bain marie
- Plug and play for an easy installation
- Perfect for safely holding sauces, gravy & pre-cooked foods
- Adjustable temperature control

# LINCAT SILVERLINK ELECTRIC COUNTER-TOP BAIN MARIE - WET HEAT - GASTRONORMS - BASE ONLY - W 600 MM - 2.0 KW

# MODEL: BM6W

## WEIGHTS & DIMENSIONS

| | |
|---|---|
| Width | 600 mil |
| Depth | 600 mil |
| Height | 290 mil |
| Weight | 14.4 kg |

## SHIPPING DETAILS

| | |
|---|---|
| Ship Width | 70 cm |
| Ship Depth | 70 cm |
| Ship Height | 49.5 cm |
| Ship Weight | 15.84 kg |
| Number of Shipment Parcels | 1 |
| Ship Method | Small Parcel (FedEx, UPS, DHL) |
| Shipping Package Type | Pieces |
| Shipping Origin Zip Code | LN6 3QZ, UNITED KINGDOM |
| Quick Ship Product | No |

## WATER, PLUMBING, AND DRAINAGE SPECS

| | |
|---|---|
| Water Line Required | No |
| Drain Line Required | No |
| Drain Location | Front Mounted |

## PRODUCT CERTIFICATIONS

Made in UK UK CA IP33

## ENERGY SPECS

| | |
|---|---|
| Primary Energy Type | Electric |
| Electrical Total Amperage | 8.7 A |
| Electrical Volts | 230V |
| Electrical Total Wattage | 2000 W |
| Electrical Kilowatts | 2 kW |
| Electrical Phase | 1-Phase |

| | |
|---|---|
| Electrical Plug Type | UK 3-Pin Plug |
| Number of Electrical Plugs | 1 |
| Electrical Connection Type | Cord and Plug |
| Number of Electrical Conductor Wires | 1 |
| Dedicated Circuit Required | No |
| Electrical Remarks | Single |

## ADDITIONAL SPECIFICATIONS

| | |
|---|---|
| Control Type | Rotary Control Knob |
| Gastronorm Capacity | 6 x GN1/4 |
| Hot Food Well Application Type | Wet |
| Insulated | No |
| Modular | Yes |

| | |
|---|---|
| Mounting Position | Top Mount Drop-In |
| Number of Wells | 6 |
| Waterless | No |
| Well Shape | Rectangle |

## BIDDING SPECIFICATIONS

Bidding Specifications Not Available.

Lincat reserves the right to modify specifications or discontinue models without incurring obligation. Dimensions nominal.

Document Auto-Generated
October 30, 2024

# LINCAT SILVERLINK ELECTRIC COUNTER-TOP BAIN MARIE - WET HEAT - GASTRONORMS - BASE ONLY - W 600 MM - 2.0 KW

# MODEL: BM6W

## TECHNICAL DRAWING

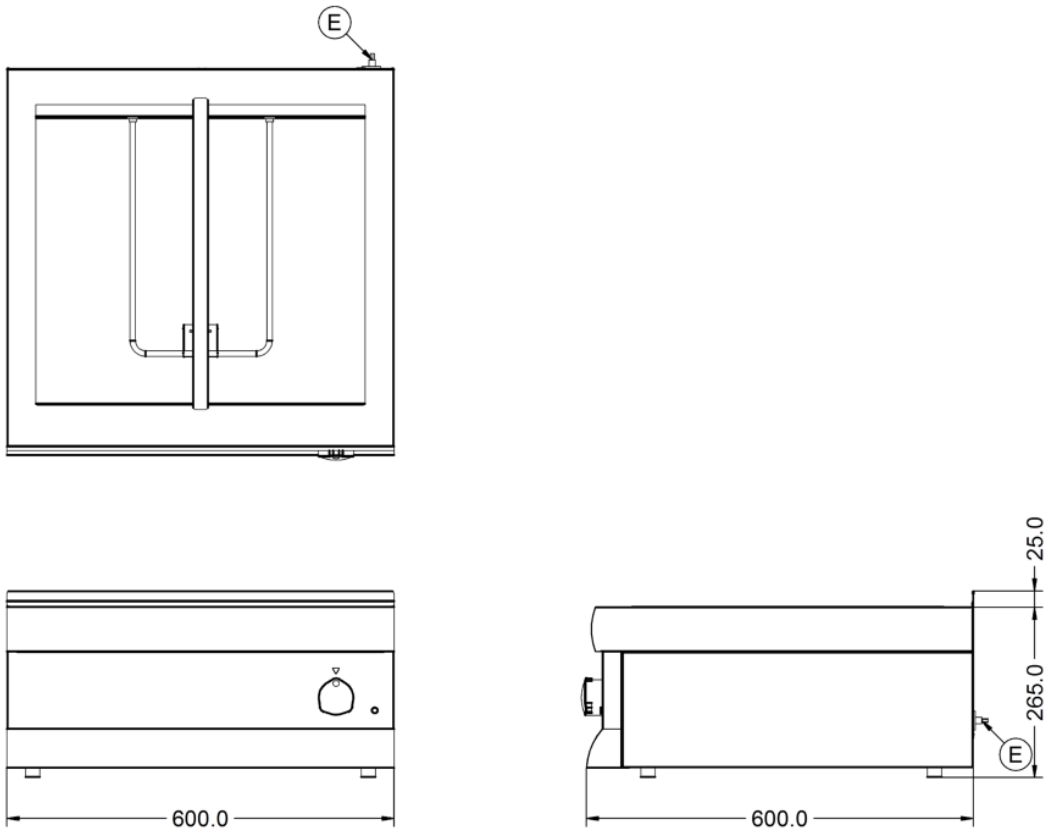


Lincat reserves the right to modify specifications or discontinue models without incurring obligation. Dimensions nominal.

Document Auto-Generated
October 30, 2024