LINCAT SILVERLINK ELECTRIC COUNTER-TOP BAIN MARIE - WET HEAT - GASTRONORMS - BASE ONLY - W 450 MM - 1.0 KW

MODEL: BM4W

AIA FILE NUMBER:

ITEM NUMBER:

SILVERLINK 600

Do you need to safely hold sauces, soups, gravy and precooked foods for up to two hours at the ideal serving temperature? This Silverlink 600 Electric Wet Heat Bain Marie does just that. Perfect for takeaways, restaurants and mobile caterers, the unit, which can also be used as a dry bain marie, is designed to plug in and play so you'll be serving delicious dishes in no time. It also comes with an adjustable temperature control.

PRODUCT OPTIONS AND ACCESSORIES

- CC4 Lincat Silverlink 600 Free-standing Ambient Open-Top Pedestal with Doors - W 450 mm
- CN4 Lincat Silverlink 600 Free-standing Ambient Open-Top Pedestal without Doors - W 450 mm
- SLS4 Lincat Silverlink 600 Free-standing Floor Stand - for units W 450 mm
- HC4 Lincat Silverlink 600 Free-standing Heated Open-Top Pedestal with Doors - W 450 mm - 0.5 kW
- HCL4 Lincat Silverlink 600 Free-standing Heated Pedestal with Legs and Doors - W 450 mm - 0.5 kW

PRODUCT FEATURES

- Wet heat bain marie
- Ideal for holding foods for up to 2 hours at serving temperature
- Base unit only supplied empty no gastronorms included
- This wet unit can also be used as a dry bain marie
- Plug and play for an easy installation
- Perfect for safely holding sauces, gravy & pre-cooked foods
- Adjustable temperature control

LINCAT SILVERLINK ELECTRIC COUNTER-TOP BAIN MARIE - WET HEAT - GASTRONORMS - BASE ONLY - W 450 MM - 1.0 KW

MODEL: BM4W

WEIGHTS & DIMENSIONS

Width	450 mil
Depth	600 mil
Height	290 mil
Weight	11.1 kg

SHIPPING DETAILS

Ship Width	70 cm
Ship Depth	55 cm
Ship Height	49.5 cm
Ship Weight	12.21 kg
Number of Shipment Parcels	1
Ship Method	Small Parcel (FedEx, UPS, DHL)
Shipping Package Type	Pieces
Shipping Origin Zip Code	LN6 3QZ, UNITED KINGDOM
Quick Ship Product	No

WATER, PLUMBING, AND DRAINAGE SPECS

Water Line Required	No
Drain Line Required	No
Drain Location	Front Mounted

PRODUCT CERTIFICATIONS

Made in UK UK CA IP33

ENERGY SPECS

Primary Energy Type	Electric
Electrical Total Amperage	4.3 A
Electrical Volts	230V
Electrical Total Wattage	1000 W
Electrical Kilowatts	1 kW
Electrical Phase	1-Phase

Electrical Plug Type	UK 3-Pin Plug
Number of Electrical Plugs	1
Electrical Connection Type	Cord and Plug
Number of Electrical Conductor Wires	1
Dedicated Circuit Required	No
Electrical Remarks	Single

ADDITIONAL SPECIFICATIONS

Control Type	Rotary Control Knob
Gastronorm Capacity	1 x GN1/1
Hot Food Well Application Type	Wet
Insulated	No
Modular	Yes

Mounting Position	Top Mount Drop-In
Number of Wells	1
Waterless	No
Well Shape	Rectangle

BIDDING SPECIFICATIONS

Bidding Specifications Not Available.

Lincat reserves the right to modify specifications or discontinue models without incurring obligation. Dimensions nominal.

Document Auto-Generated
October 30, 2024

LINCAT SILVERLINK ELECTRIC COUNTER-TOP BAIN MARIE - WET HEAT - GASTRONORMS - BASE ONLY - W 450 MM - 1.0 KW

MODEL: BM4W

TECHNICAL DRAWING

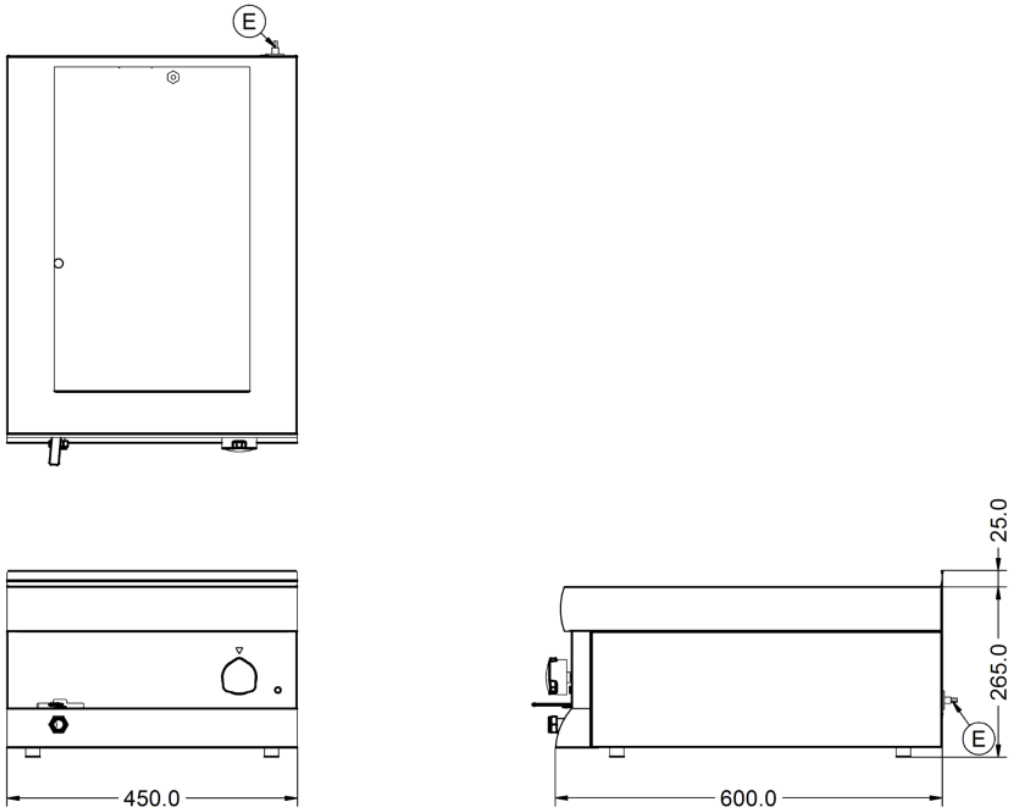

Lincat reserves the right to modify specifications or discontinue models without incurring obligation. Dimensions nominal.

Document Auto-Generated
October 30, 2024