LINCAT SILVERLINK ELECTRIC COUNTER-TOP ADJUSTABLE SALAMANDER GRILL - W 600 MM - 4.5 KW

MODEL: AS4

SILVERLINK 600

Fast and convenient, the Silverlink 600 Electric Adjustable Salamander allows you to alter the height of the unit so that you can grill and toast your way. The Salamander, which comes with added power, is 1/1 gastronorm compatible and features a smooth action and easy-lift grill hood. Great for cafes, pubs and restaurants, the Salamander is designed to plug in and play, which means you'll be creating mouthwatering meals in no time. It comes with a chromed toasting rack and removable fat collection tray for easy cleaning.

AIA FILE NUMBER:

ITEM NUMBER:

PRODUCT OPTIONS AND ACCESSORIES

- BR51 AS4 & AS3 WALL BRACKET

PRODUCT FEATURES

- Higher powered
- Ideal for the grilling and gratinating of a range of food types
- 1/1 gastronorm compatible for convenience in use
- Smooth action and easy-lift grill hood
- The height markings and audible timer ensures consistent results every time
- Chromed toasting rack included
- Removable fat collection tray is included to make cleaning easier

MIDDLEBY
A PROUD MIDDLEBY COMPANY

Whisby Road, Lincoln, LN6 3QZ, UK
www.lincat.co.uk | p: +44 1522 875500

LINCAT SILVERLINK ELECTRIC COUNTER-TOP ADJUSTABLE SALAMANDER GRILL - W 600 MM - 4.5 KW

MODEL: AS4

WEIGHTS & DIMENSIONS

Width	600 mil
Depth	472 mil
Height	500 mil
Weight	45 kg

SHIPPING DETAILS

Ship Width	70.3 cm
Ship Depth	70.3 cm
Ship Height	102.3 cm
Ship Weight	49.5 kg
Number of Shipment Parcels	1
Ship Method	Small Parcel (FedEx, UPS, DHL)
Shipping Package Type	Pieces
Shipping Origin Zip Code	LN6 3QZ, UNITED KINGDOM
Quick Ship Product	No

PRODUCT CERTIFICATIONS

IP23 UK CA Made in UK

ENERGY SPECS

Primary Energy Type	Electric
Electrical Total Amperage	19.6 A
Electrical Volts	230V
Electrical Total Wattage	4500 W
Electrical Kilowatts	4.5 kW
Electrical Phase	1-Phase
Electrical Plug Type	Hardwired
Number of Electrical Plugs	Not Applicable
Electrical Connection Type	Direct Hardwired
Number of Electrical Conductor Wires	1
Dedicated Circuit Required	Yes
Electrical Remarks	Single

ADDITIONAL SPECIFICATIONS

Broiler Base Configuration	Not Applicable
Broiler Type	Salamander
Control Type	Mechanical, Rotary Control Knob
Cooking Area Plate Depth	340 mm
Cooking Area Plate Width	532 mm
Gastronorm Capacity	1 x GN1/1
Heat Location	Top Only
Heat Source Type	Infrared
Number of Heating Zones	1
Number of Shelf Positions	not_applicable

BIDDING SPECIFICATIONS

Bidding Specifications Not Available.

Lincat reserves the right to modify specifications or discontinue models without incurring obligation. Dimensions nominal.

Document Auto-Generated
October 30, 2024

LINCAT SILVERLINK ELECTRIC COUNTER-TOP ADJUSTABLE SALAMANDER GRILL - W 600 MM - 4.5 KW

MODEL: AS4

TECHNICAL DRAWING

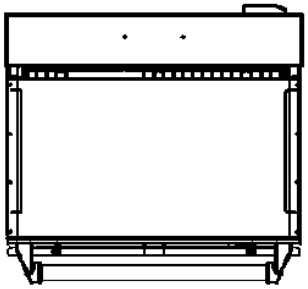

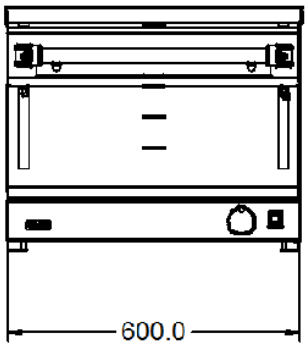

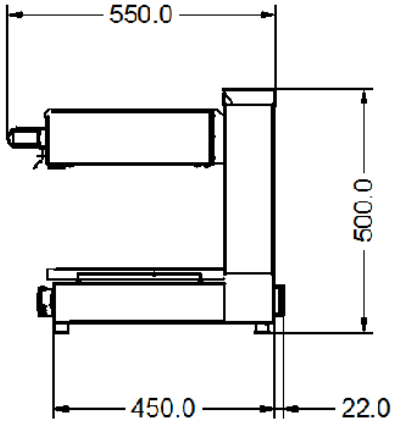

Lincat reserves the right to modify specifications or discontinue models without incurring obligation. Dimensions nominal.

Document Auto-Generated
October 30, 2024