LINCAT SILVERLINK ELECTRIC FREE-STANDING OVEN RANGE - CASTORS AT REAR - 6 PLATES - W 900 MM - 13.0 KW [1-PHASE]

MODEL: ESLR9C/SPH

Cook quality food at volume with the Silverlink 600 Electric Oven Range. With a large capacity oven for increased productivity, the range is perfect for care homes as well as smaller pubs and restaurants. The range comes with six hotplates and a twin fan assisted oven for uniformed heat and consistent cooking. Built to last, the fully pressed and sealed hob tops make the unit easy to clean and maintain.

AIA FILE NUMBER:

ITEM NUMBER:

PRODUCT OPTIONS AND ACCESSORIES

- SLR9/SB SPLASHBACK

PRODUCT FEATURES

- Compact 600mm deep footprint - perfect for care homes as well as smaller pubs and restaurants
- Six hotplates 3 x 2.0kW, 3 x 1.5kW with six-position control knob for each plate - higher power for sautéing at the front, lower power to the rear ideal for simmering
- Automatic power reduction, if pan boils dry or is removed - prolonging hotplate life
- Easy clean fully pressed and sealed hob
- Powerful 4kW twin fan assisted oven for uniform heat distribution and consistent cooking
- Double insulated doors, side and back panels providing safer operation, greater efficiency, and economy
- Castors at rear to enable unit to be pulled out for deeper cleans

LINCAT SILVERLINK ELECTRIC FREE-STANDING OVEN RANGE - CASTORS AT REAR - 6 PLATES - W 900 MM - 13.0 KW [1-PHASE]

MODEL: ESLR9C/SPH

WEIGHTS & DIMENSIONS

Width	900 mil
Depth	670 mil
Height	932 mil
Weight	95 kg

SHIPPING DETAILS

Ship Width	100 cm
Ship Depth	81 cm
Ship Height	110 cm
Ship Weight	104.5 kg
Number of Shipment Parcels	1
Ship Method	LTL Common Carrier
Shipping Package Type	Pieces
Shipping Origin Zip Code	LN6 3QZ, UNITED KINGDOM
Quick Ship Product	No

PRODUCT CERTIFICATIONS

Made in UK UKCA IP34

ENERGY SPECS

Primary Energy Type	Electric
Electrical Amps Per Conductor	Single Phase 56.5/Three Phase L1=30.4; L2=26.1; L3=N/
Electrical Total Amperage	56.5 A
Electrical Volts	230-400V
Electrical Total Wattage	13000 W
Electrical Kilowatts	13 kW
Watts Per Element	6 x 1500
Electrical Plug Type	Hardwired
Number of Electrical Plugs	Not Applicable
Electrical Connection Type	Direct Hardwired
Number of Electrical Conductor Wires	1
Dedicated Circuit Required	Yes
Electrical Remarks	Single,Three

ADDITIONAL SPECIFICATIONS

Control Type	Rotary Control Knob
Cooking Plate Finish Material Type	Cast Iron Plate
Exterior Finish Color	Stainless Steel
Exterior Trim Finish Color	Stainless Steel
High Altitude Kit Available	No
Number of Heating Zones	6
Number of Hot Top Burners	6
Number of Shelf Positions	4
Number of Shelves	2
Open or Sealed Burners	Not Applicable
Oven Power Rating	4 kW
Oven Temperature Maximum	250 °C
Oven Temperature Minimum	50 °C
Shelf Depth	342 mm
Shelf Width	700 mm
Cooking Equipment	Hob 1
BTUs Per Burner	1.5 KW

Lincat reserves the right to modify specifications or discontinue models without incurring obligation. Dimensions nominal.

Document Auto-Generated
October 30, 2024

LINCAT SILVERLINK ELECTRIC FREE-STANDING OVEN RANGE - CASTORS AT REAR - 6 PLATES - W 900 MM - 13.0 KW [1-PHASE]

MODEL: ESLR9C/SPH

SELECT COOKING EQUIPMENT	NUMBER OF	POWER RATING	ARRANGE-MENT	WIDTH	DEPTH
Electric Round Hot Plate 1	3	2	Center Front	300 mm	300 mm
Electric Round Hot Plate 2	3	1.5	Center Rear	300 mm	300 mm

SELECT BASE EQUIPMENT	NUMBER OF	CUBIC CAPACITY EACH	WIDTH	DEPTH	HEIGHT
Standard Oven 1			725 mm	342 mm	428 mm

BIDDING SPECIFICATIONS

Bidding Specifications Not Available.

Lincat reserves the right to modify specifications or discontinue models without incurring obligation. Dimensions nominal.

Document Auto-Generated
October 30, 2024

LINCAT SILVERLINK ELECTRIC FREE-STANDING OVEN RANGE - CASTORS AT REAR - 6 PLATES - W 900 MM - 13.0 KW [1-PHASE]

MODEL: ESLR9C/SPH

TECHNICAL DRAWING

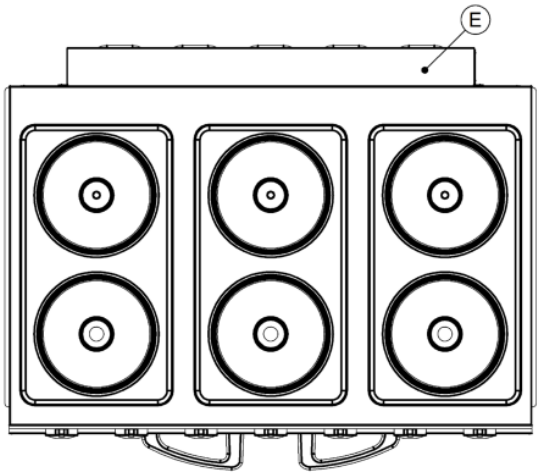

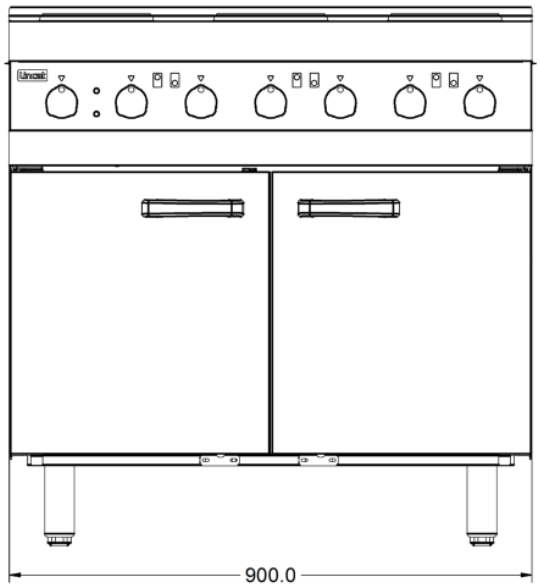

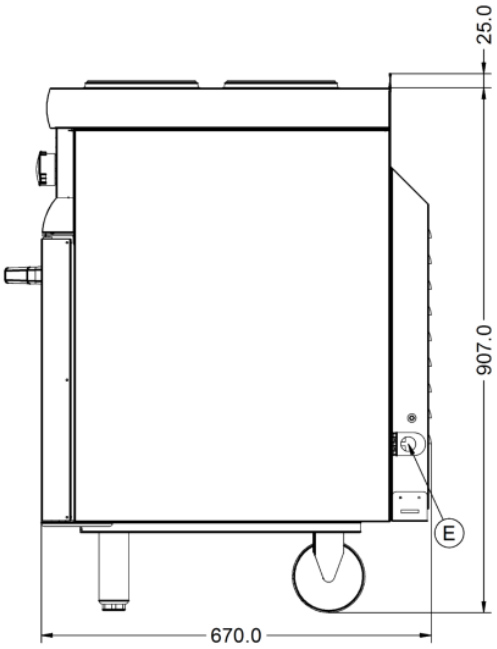

Lincat reserves the right to modify specifications or discontinue models without incurring obligation. Dimensions nominal.

Document Auto-Generated
October 30, 2024