# FRIFRI PRECISION 633 ELECTRIC FREE-STANDING TRIPLE TANK FRYER - 3 BASKETS - W 600 MM - 3 X 9.0 KW - THREE PHASE

# MODEL: PL633M31G0

Precision

For the chef who wants superb temperature control for consistently excellent results, a free standing Precision 633 is the fryer of choice.

AIA FILE NUMBER:

ITEM NUMBER:

## PRODUCT FEATURES

- Electronic temperature control and powerful elements maintains oil to within +/- 1 °C of the temperature selected, reducing oil usage and ensuing your food always has that all-important crunch.
- With one cooking programme, perfect for when you want to cook the same product time after time, to the same exacting standards.
- Digital timer displays the count down, with a buzzer sounding at the end of the cook cycle.
- Temperature view shows current oil temperature, enabling you to make an informed decision as to when to start cooking.
- Are there more fries than last time? Adaptive cooking automatically adjusts the cooking times to suit your batch size ensuring you never serve undercooked food.
- Keeping your oil in peak condition! Optional xFri© filters the oil at the push of a button and returns oil to the tank. Filter the oil safely, even while it's still hot, mid service if necessary, and resume frying in minutes – so easy there is no excuse not to!
- Raising food to the next level.

# FRIFRI PRECISION 633 ELECTRIC FREE-STANDING TRIPLE TANK FRYER - 3 BASKETS - W 600 MM - 3 X 9.0 KW - THREE PHASE

# MODEL: PL633M31G0

## WEIGHTS & DIMENSIONS

| | |
|---|---|
| Width | 592 mil |
| Depth | 650 mil |
| Height | 994 mil |
| Weight | 98.5 kg |

## SHIPPING DETAILS

| | |
|---|---|
| Ship Width | 79 cm |
| Ship Depth | 72 cm |
| Ship Height | 113 cm |
| Ship Weight | 107.57 kg |
| Number of Shipment Parcels | 1 |
| Ship Method | LTL Common Carrier |
| Shipping Package Type | Pieces |
| Shipping Origin Zip Code | LN6 3QZ, UNITED KINGDOM |
| Quick Ship Product | No |

## PRODUCT CERTIFICATIONS

Made in UK UK CA IPX4

## ENERGY SPECS

| | |
|---|---|
| Primary Energy Type | Electric |
| Electrical Amps Per Conductor | L1=39.1; L2=39.1; L3=39.1 |
| Electrical Total Amperage | 117.3 A |
| Electrical Volts | 400V |
| Electrical Total Wattage | 27000 W |
| Electrical Kilowatts | 27 kW |
| Electrical Phase | 3-Phase |
| Electrical Plug Type | Hardwired |
| Number of Electrical Plugs | Not Applicable |
| Electrical Connection Type | Direct Hardwired |
| Number of Electrical Conductor Wires | 1 |
| Electrical Remarks | Three |

FriFri reserves the right to modify specifications or discontinue models without incurring obligation. Dimensions nominal.

Document Auto-Generated
October 30, 2024

# FRIFRI PRECISION 633 ELECTRIC FREE-STANDING TRIPLE TANK FRYER - 3 BASKETS - W 600 MM - 3 X 9.0 KW - THREE PHASE

# MODEL: PL633M31G0

## ADDITIONAL SPECIFICATIONS

| | |
|---|---|
| Auto Oil Top-Off | No |
| Basket Lift Type | Optional |
| Construction Remarks | Stainless Steel Grade 304 |
| Control Type | Digital Touch Pad |
| Filter Media Type (if applicable) | 2-Stage: Fine Tissue Filter and Stainless Steel Filter |
| Food Production Rate | 3 x 20kg fries - 7mm [frozen] |
| Fryer Type | Open Pot |
| Integrated Filtration | Yes |
| Number of Baskets | 1 |
| Number of Vats (batteries) | 3 |
| Total Oil Capacity (volume) | 18 l |
| Oil Reclamation | No |
| Oil Temperature Control | Electronic |
| Pumped Oil Filtration | Optional |
| Split Pot | Yes |
| Temperature Maximum | 190 °C |
| Temperature Minimum | 60 °C |
| Vat 1 Oil Capacity (volume) | 6 l |
| Vat 2 Oil Capacity (volume) | 6 l |
| Vat 3 Oil Capacity (volume) | 6 l |

## BIDDING SPECIFICATIONS

Bidding Specifications Not Available.

FriFri reserves the right to modify specifications or discontinue models without incurring obligation. Dimensions nominal.

Document Auto-Generated
October 30, 2024

# FRIFRI PRECISION 633 ELECTRIC FREE-STANDING TRIPLE TANK FRYER - 3 BASKETS - W 600 MM - 3 X 9.0 KW - THREE PHASE

# MODEL: PL633M31G0

## TECHNICAL DRAWING

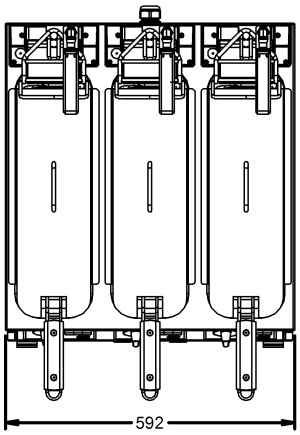


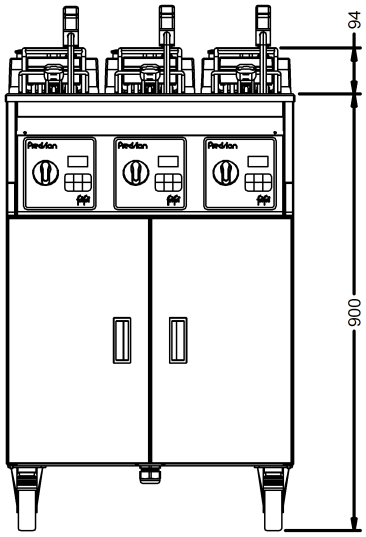


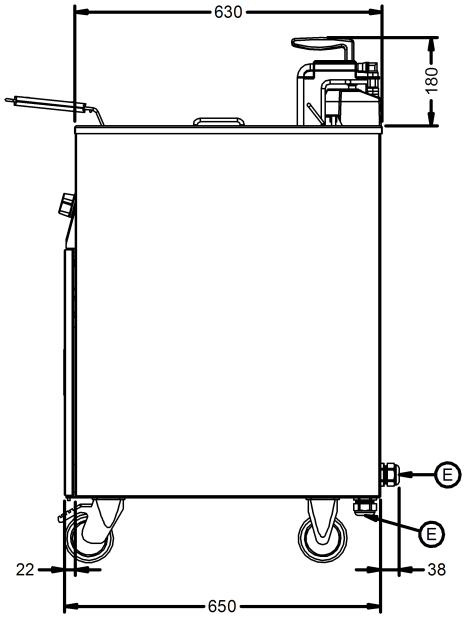


FriFri reserves the right to modify specifications or discontinue models without incurring obligation. Dimensions nominal.

Document Auto-Generated
October 30, 2024