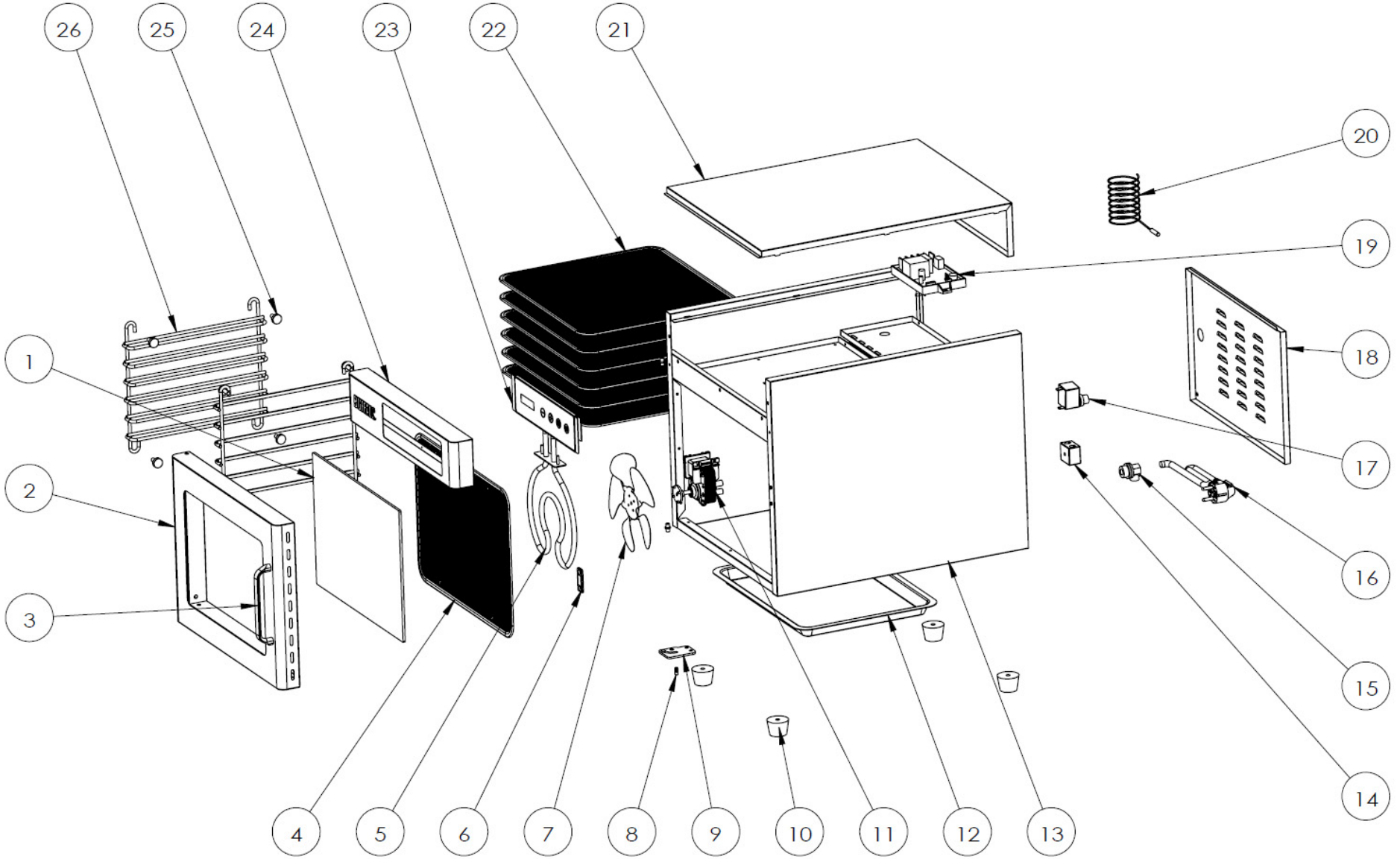

☎ Technical & Spares helpline 0845 111 0538
spares@uropa-service.co.uk

Machine	Explode	Code	Description
JK755 - Buffalo 6 Tray Dehydrator	1	AX079	Door Glass
JK755 - Buffalo 6 Tray Dehydrator	2		Outer Door Panel Assembly Welding
JK755 - Buffalo 6 Tray Dehydrator	3		Handle - AX081
JK755 - Buffalo 6 Tray Dehydrator	4	AX082	Barrier Net
JK755 - Buffalo 6 Tray Dehydrator	5	AX084	Heating Element
JK755 - Buffalo 6 Tray Dehydrator	6	☎	Magnetic Sheet
JK755 - Buffalo 6 Tray Dehydrator	7	AX086	Axial Flow Blade
JK755 - Buffalo 6 Tray Dehydrator	11		Motor
JK755 - Buffalo 6 Tray Dehydrator	8	☎	Cylindrical Pin
JK755 - Buffalo 6 Tray Dehydrator	9	☎	Door Pivot Plate
JK755 - Buffalo 6 Tray Dehydrator	10	AK211	Rubber Feet (Set 4)
JK755 - Buffalo 6 Tray Dehydrator	12	AX087	Crumb Tray
JK755 - Buffalo 6 Tray Dehydrator	13	☎	Furnace Components
JK755 - Buffalo 6 Tray Dehydrator	14	AX088	Terminal Row
JK755 - Buffalo 6 Tray Dehydrator	15	AL187	Power Cable Head
JK755 - Buffalo 6 Tray Dehydrator	16	AL186	UK Power Cord
JK755 - Buffalo 6 Tray Dehydrator	17	AS806	Temperature Cut Out
JK755 - Buffalo 6 Tray Dehydrator	18	☎	Rear Panel
JK755 - Buffalo 6 Tray Dehydrator	19	AX089	Power Mainboard
JK755 - Buffalo 6 Tray Dehydrator	20	AX090	Temperature Sensor
JK755 - Buffalo 6 Tray Dehydrator	21	☎	Upper Sealing Plate
JK755 - Buffalo 6 Tray Dehydrator	22	AX091	Grilling Net
JK755 - Buffalo 6 Tray Dehydrator	23	AX092	Glass Control Panel
JK755 - Buffalo 6 Tray Dehydrator	24	☎	Front Panel
JK755 - Buffalo 6 Tray Dehydrator	25	☎	Screw
JK755 - Buffalo 6 Tray Dehydrator	26	☎	Layer Frame Board

☎ Technical & Spares helpline 0845 111 0538
spares@uropa-service.co.uk