POLAR

JF005 / PG072

FREEZER COOLING UNIT
MATERIAL AND TECHNICAL CHARACTERISTICS MANUAL



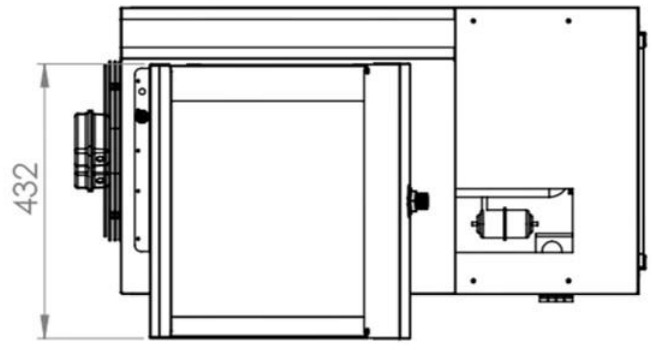
432

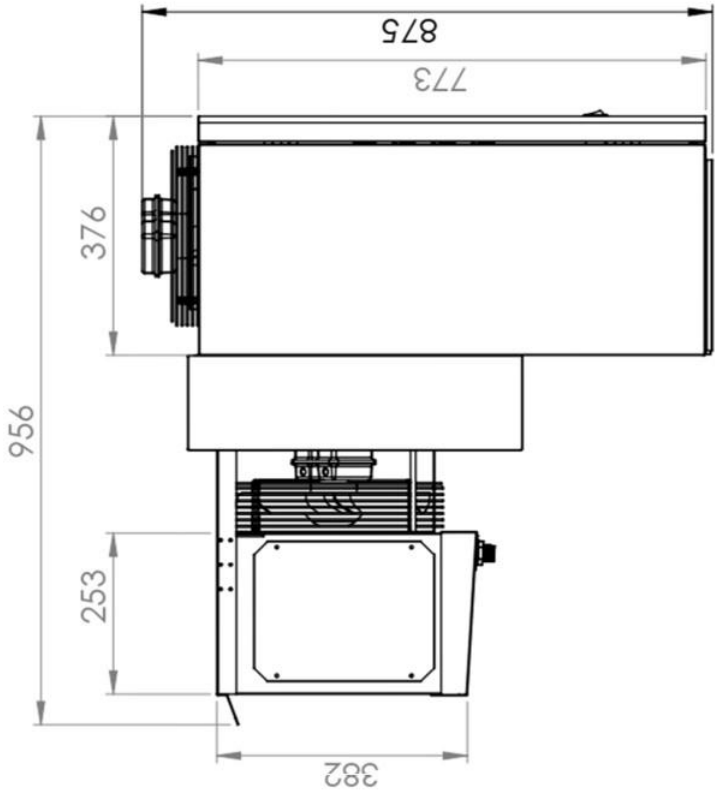
875
773
376
956
253
382

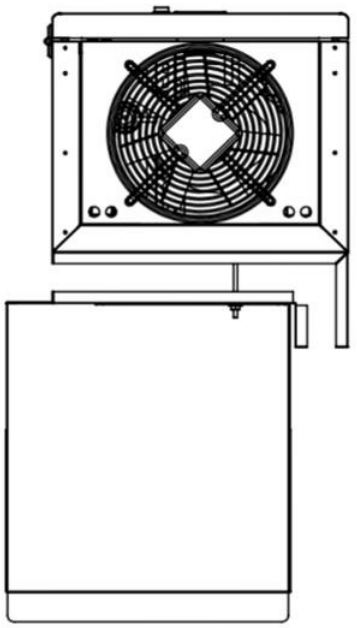

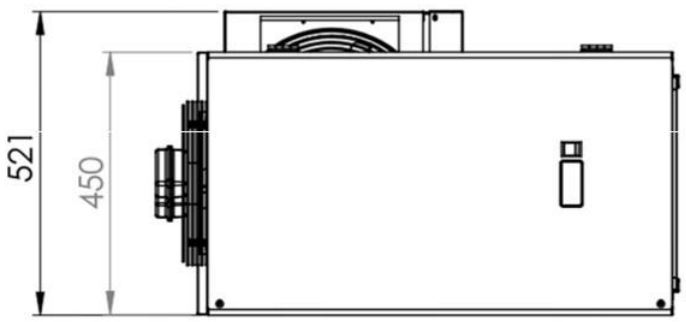
521
450

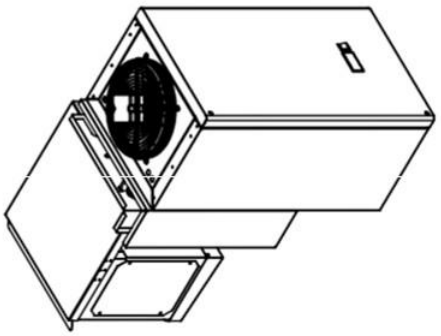

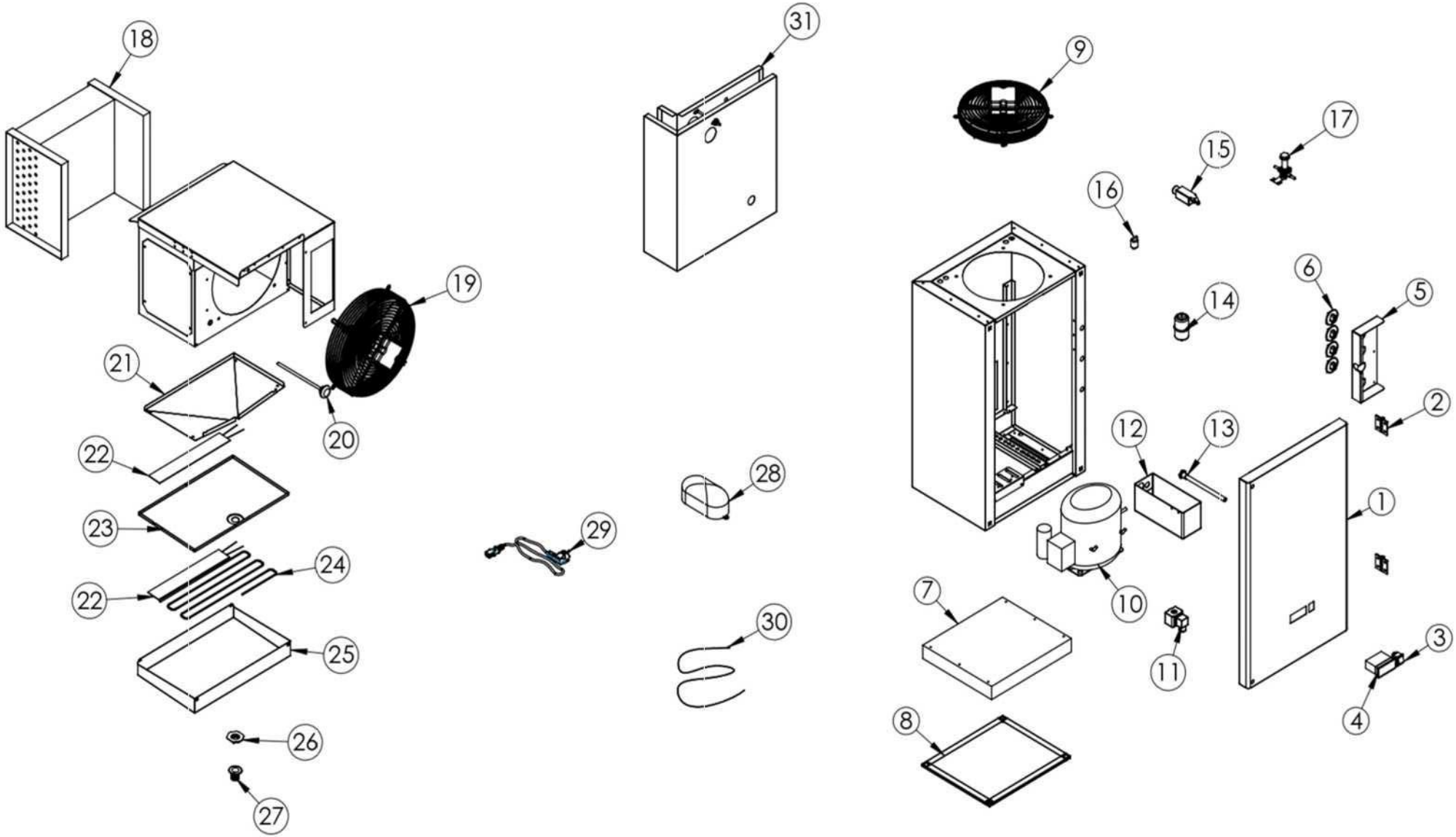
18
19
21
20
22
23
24
22
25
26
27
31
29
28
30
9
17
15
16
14
6
5
2
12
13
1
10
7
11
3
4
8

JF005 FREEZER COOLING UNIT SPARE PARTS LIST

NO	Part Number	Product Code	Description	QTY
1	SG20130505		Canopy Sheet	1
2	B01ME124		Canopy Hinge	1
3	B00DU102	AY061	Polar On/Off Button for JF003 JF004 JF005 JF006	1
4	A00DJ100	AY282	Polar Digital Thermostat for JF005 JF006 Refrigerator Cooling Unit Deep Freeze	1
5	C05010026		Socket House	1
6	E00KR105		Connector	1
7	A00KN576		1700 Condenser	1
8	B00FT104		Pramit Filter	1
9	A00FA119	AY056	Polar 250 Axial Fan For Condenser for JF005 JF006	1
10	A00KO206	AY058	Polar Compressor for JF005	1
11	A00SL101	AY050	Polar Solenoid Valve For JF005 JF006	1
12	B01BH114		Cooling Group Drainage Pan	1
13	B00REZ106	AY066	Polar Pan Resistance for JF003 JF004 JF005 JF006	1
14	A00DR102	AY053	Polar 3/8 Drier for JF003 JF004 JF005 JF006	1
15	B00DU106	AY062	Polar Door Switch for JF003 JF004 JF005 JF006	1
16	B00SL106		Pressure Sender	1
17	A00SL101	AY050	Polar Solenoid Valve For JF005 JF006	1
18	A00EV115		1150 Evaporator	1
19	A00FA112	AY055	Polar 300 Axial Fan for Evap for JF005 JF006	1
20	E00SP108		M8 Stud	1
21	AL1101401		Bypass Sheet For Evaporator	1
22	B00REZ156		80W Silicon Resistance	1

23	SG20212069		Bypass Sheet	1
24	B00REZ104	AY065	Polar Drainage Resistance 1+1 for JF003 JF004 JF005 JF006	1
25	SG20212048		1150 Water Tray	1
26	E00RE110	AY067	Polar Record Seal for JF003 JF004 JF005 JF006	1
27	E00RE109		Water Drain Record	1
28	B00LA142	AY064	Polar Cold Room Lighting for JF003 JF004 JF005 JF006	1
29	B00FK901	AY063	Polar Cable With Plug for JF003 JF004 JF005 JF006	1
30	A00DJ109	AY052	Polar Probe For JF003 JF004 JF005 JF006	1
31	-		Cold Room Corner Panel	1

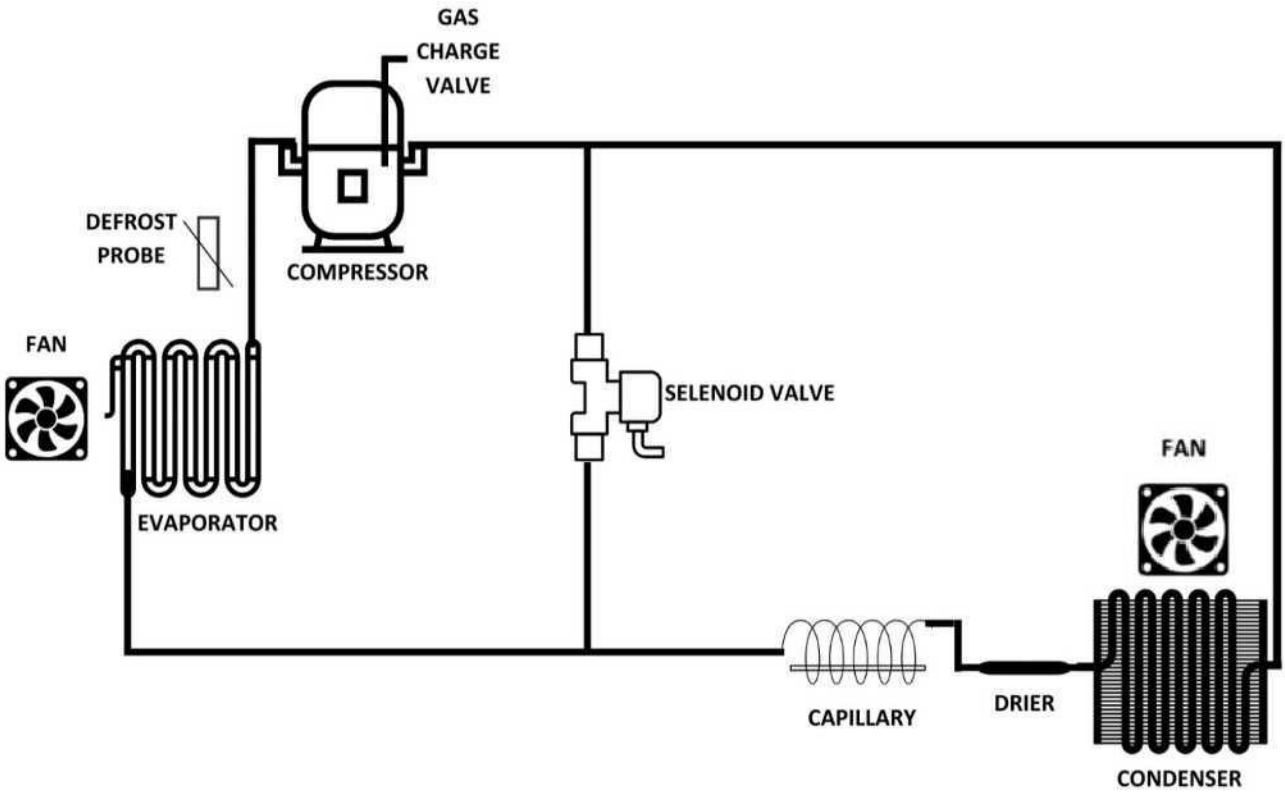

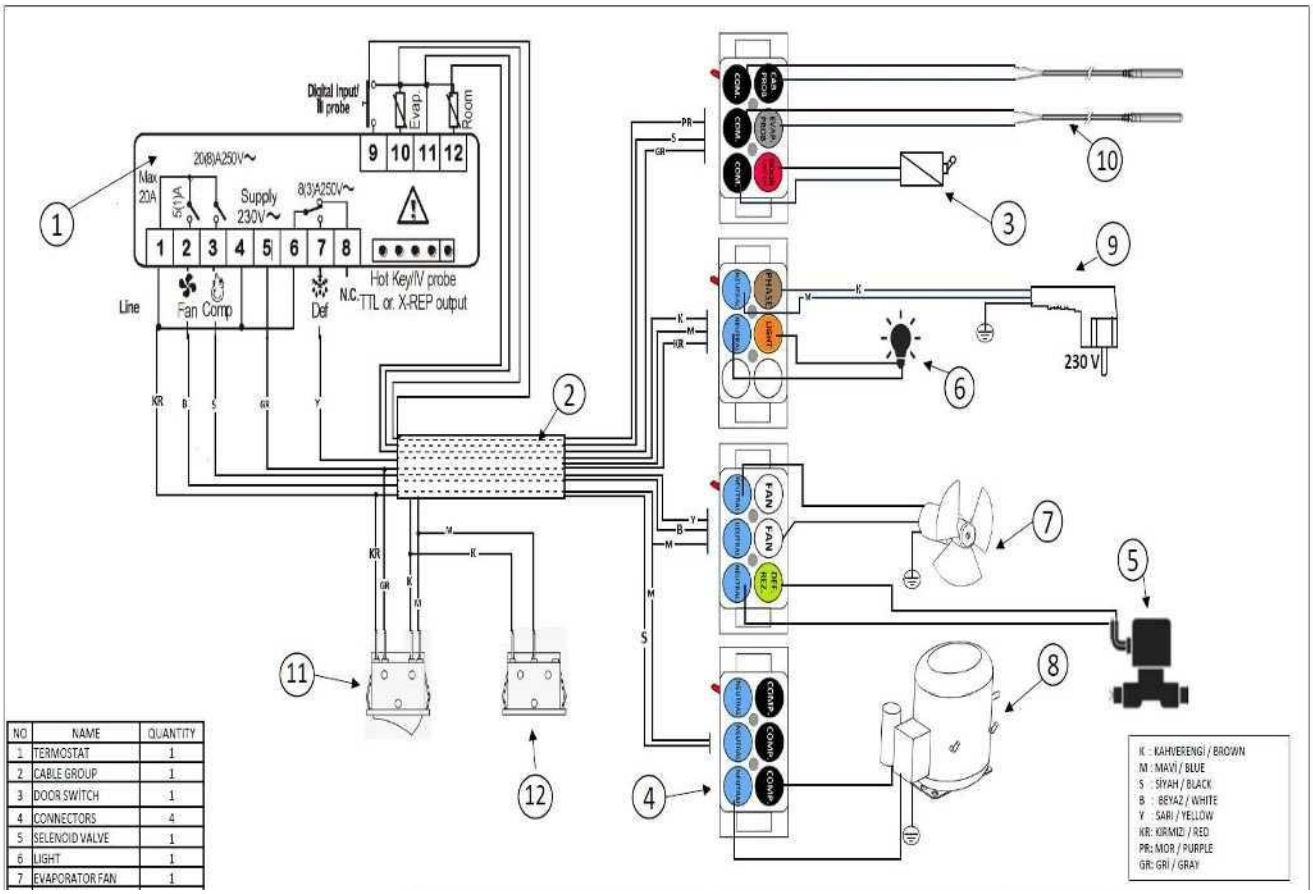

NO	NAME	QUANTITY
1	TERMOSTAT	1
2	CABLE GROUP	1
3	DOOR SWITCH	1
4	CONNECTORS	4
5	SELENOID VALVE	1
6	LIGHT	1
7	EVAPORATOR FAN	1