JF003 / PG070

REFRIGERATOR COOLING UNIT
MATERIAL AND TECHNICAL CHARACTERISTICS MANUAL



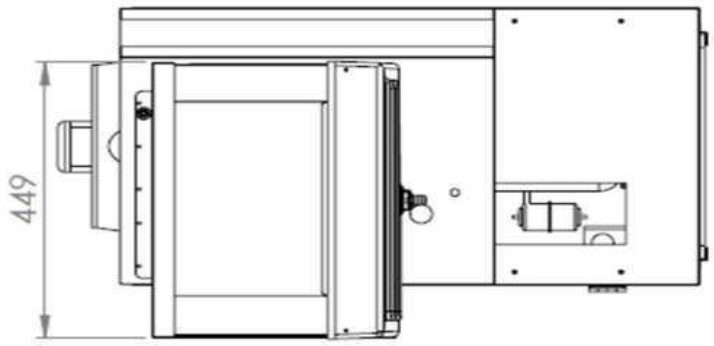
449

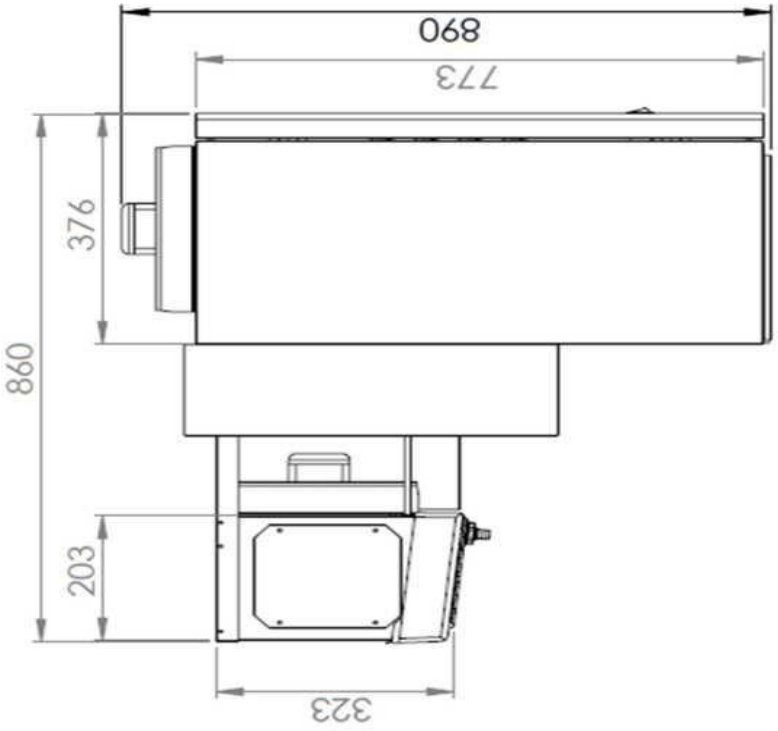
890
773
376
860
203
323

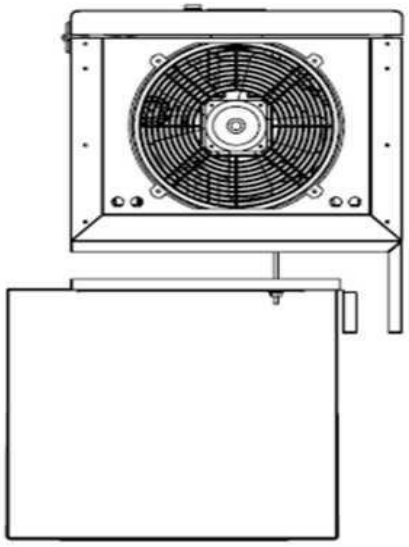

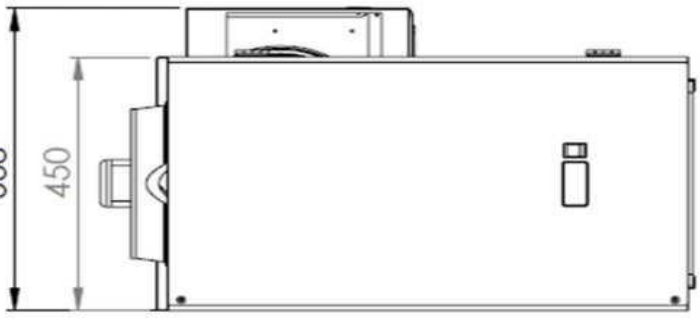
538
450

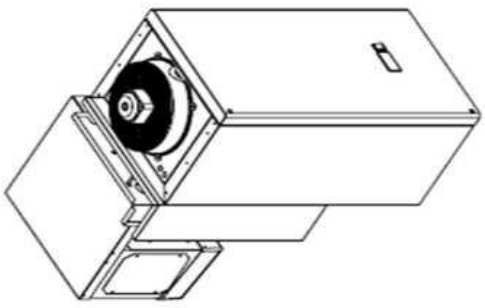

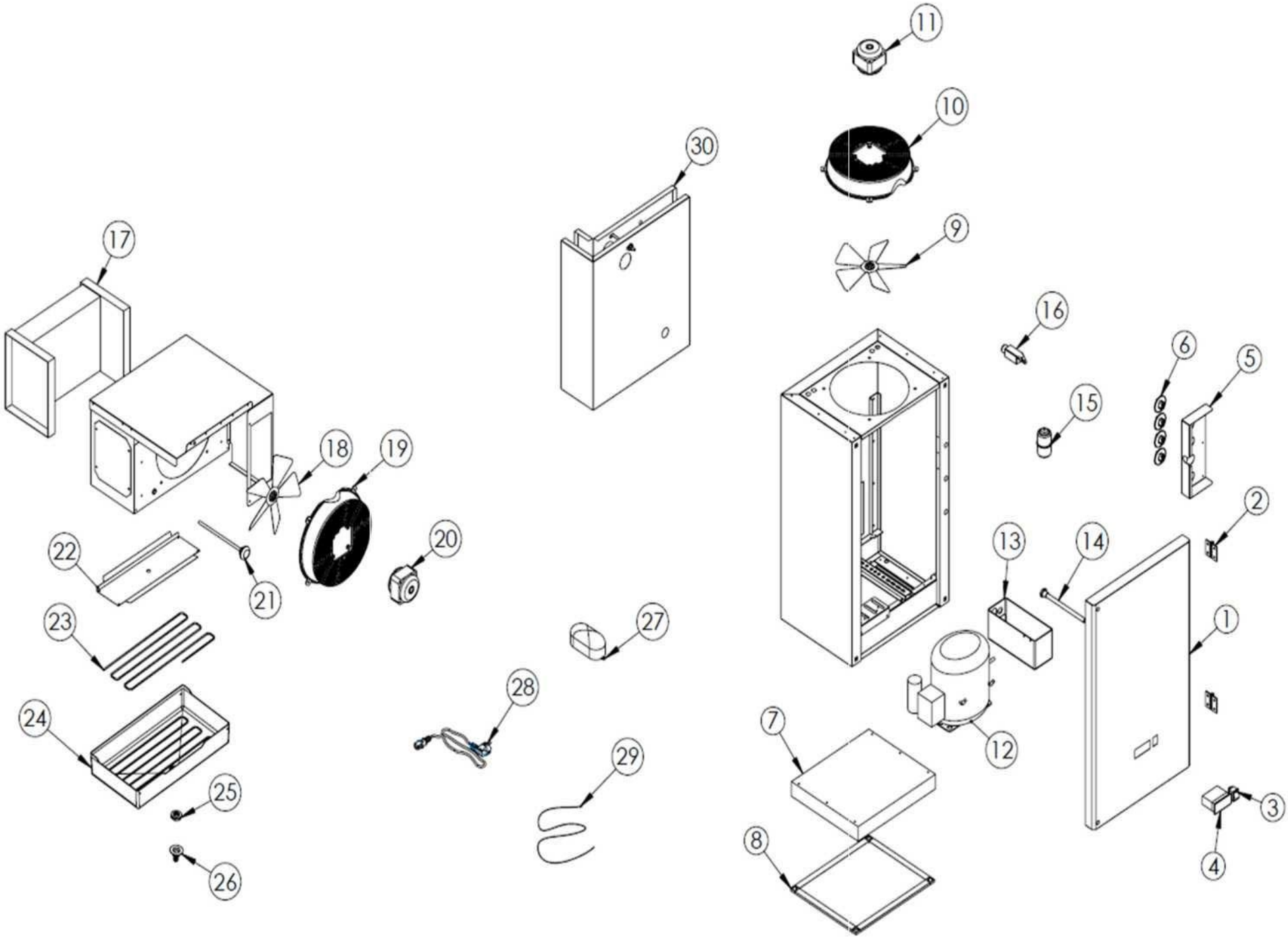

11
10
30
9
17
16
6
5
15
18
19
2
22
20
13
14
21
23
27
1
28
24
7
12
29
25
3
8
4
26

JF003 REFRIGERATOR COOLING UNIT SPARE PARTS LIST

NO	Part Number	Product Code	Description	QTY
1	SG20130505		Canopy Sheet	1
2	B01ME124		Canopy Hinge	1
3	B00DU102	AY061	Polar On/Off Button for JF003 JF004 JF005 JF006	1
4	A00DJ100	AY051	Polar Digital Thermostat for JF003 JF004 Refrigerator Cooling Unit	1
5	C05010026		Socket House	1
6	E00KR105		Connector	1
7	A00KN576		1700 Condenser	1
8	B00FT104		Pramit Filter	1
9	A00FA105		Condenser Fan Blade	1
10	A00EP101		Plastic Cover For Fan	1
11	A00FA104		ELCO 16W Fan Motor	1
12	A00KO217	AY060	Polar Compressor for JF003	1
13	B01BH114		Cooling Group Drainage Pan	1
14	B00REZ106	AY066	Polar Pan Resistance for JF003 JF004 JF005 JF006	1
15	A00DR102	AY053	Polar 3/8 Drier for JF003 JF004 JF005 JF006	1
16	B00DU106	AY062	Polar Door Switch for JF003 JF004 JF005 JF006	1
17	A00EV305		750 Evaporator	1
18	A00FA105		Evap Fan Blade	1
19	A00EP101		Plastic Cover For Fan	1
20	A00FA104		ELCO 16W Fan Motor	1
21	E00SP108		M8 Stud	1
22	SG20212067		Bypass Sheet	1

23	B00REZ104	AY065	Polar Drainage Resistance 1+1 for JF003 JF004 JF005 JF006	1
24	B01BH112		750 Water Tray	1
25	E00RE110	AY067	Polar Record Seal for JF003 JF004 JF005 JF006	1
26	E00RE109		Water Drain Record	1
27	B00LA142	AY064	Polar Cold Room Lighting for JF003 JF004 JF005 JF006	1
28	B00FK901	AY063	Polar Cable With Plug for JF003 JF004 JF005 JF006	1
29	A00DJ109	AY052	Polar Probe For JF003 JF004 JF005 JF006	1
30	-		Cold Room Corner Panel	1

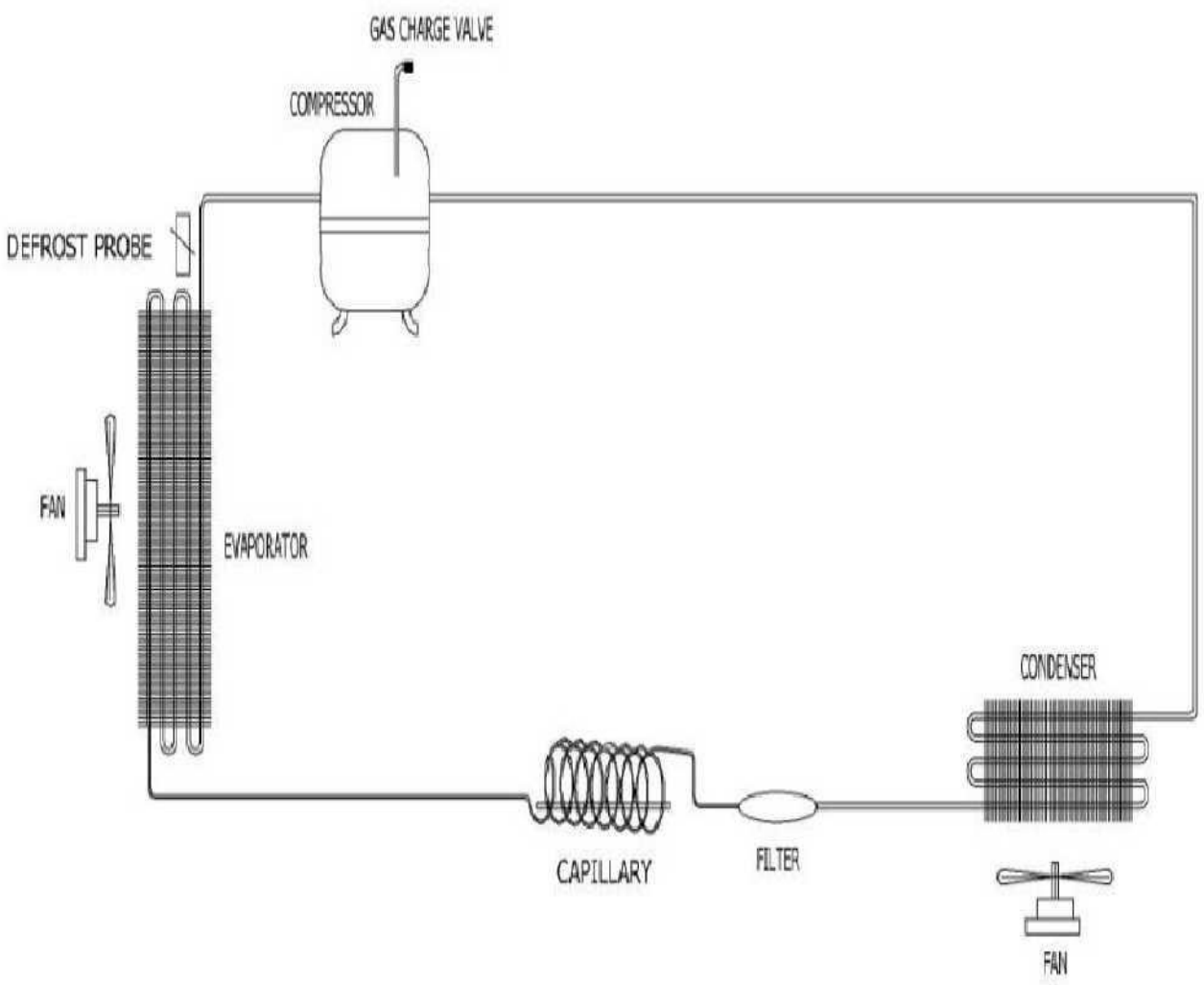

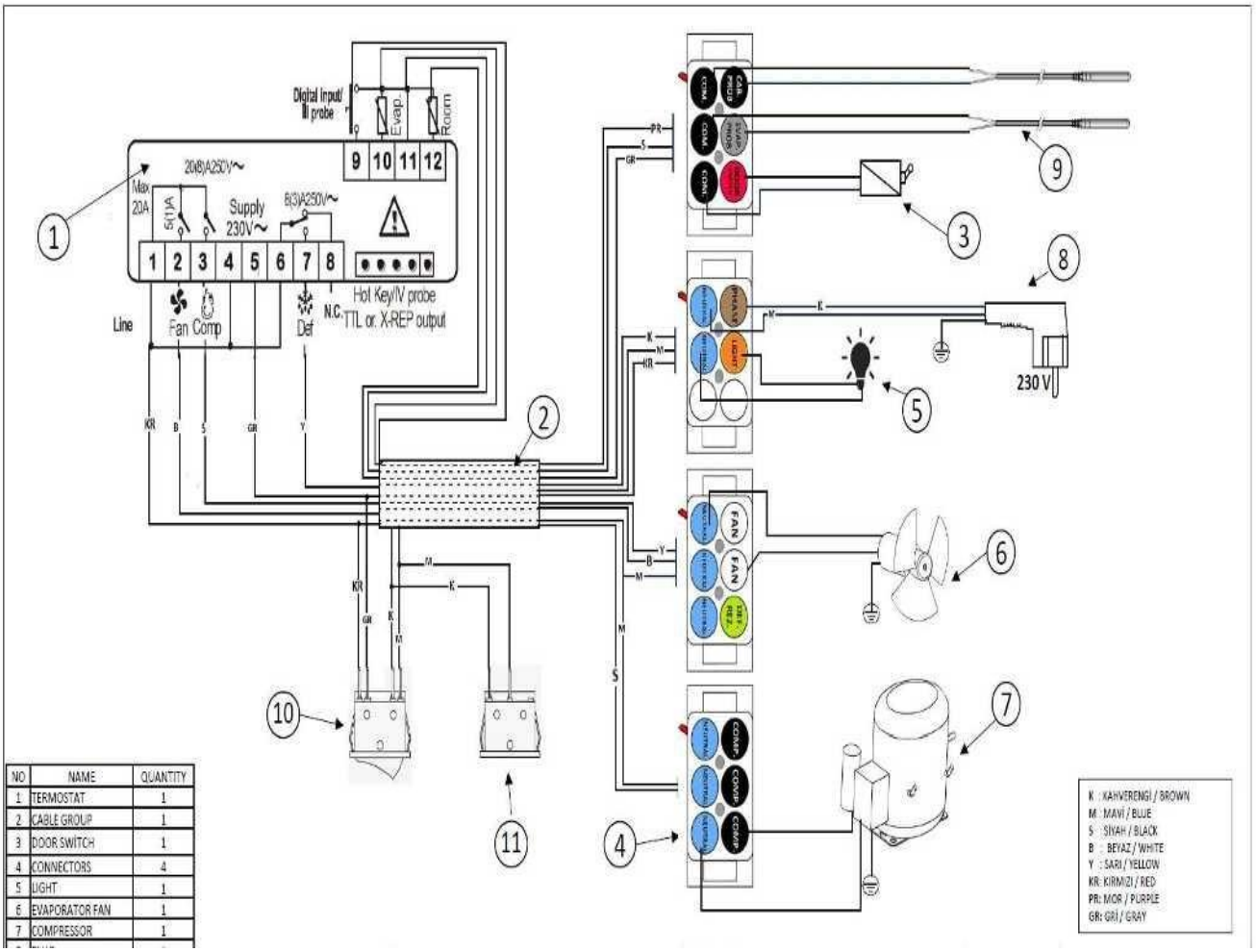

NO	NAME	QUANTITY
1	TERMOSTAT	1
2	CABLE GROUP	1
3	DOOR SWITCH	1
4	CONNECTORS	4
5	LIGHT	1
6	EVAPORATOR FAN	1
7	COMPRESSOR	1

K : KAHVERENGİ / BROWN
M : MAVİ / BLUE
S : SİYAH / BLACK
B : BEYAZ / WHITE
Y : SARI / YELLOW
KR: KIRMIZI / RED
PR: MOR / PURPLE
GR: GRİ / GRAY