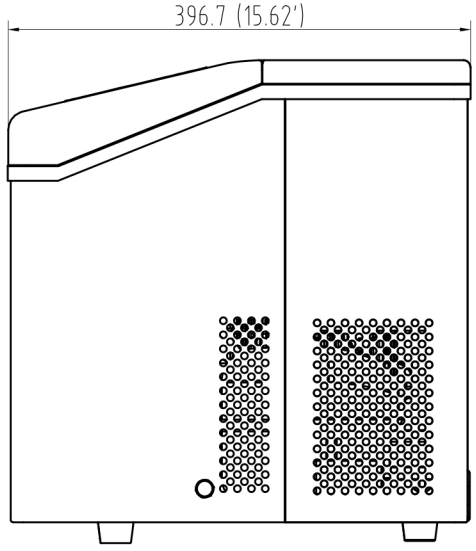

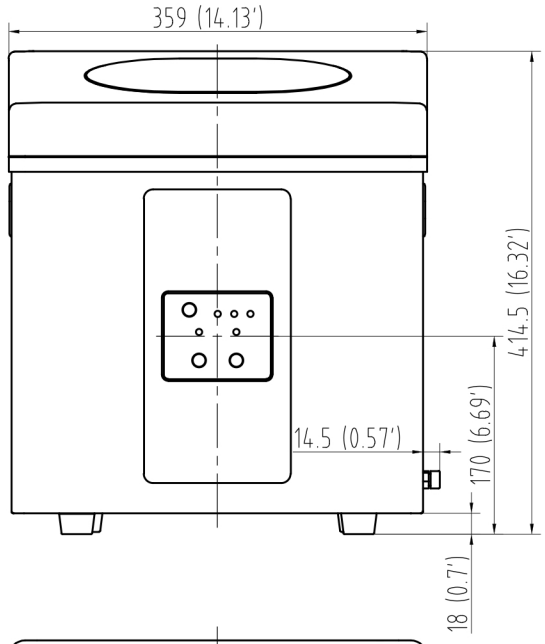

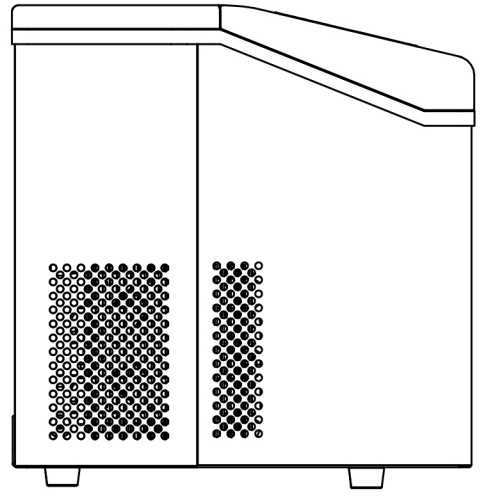

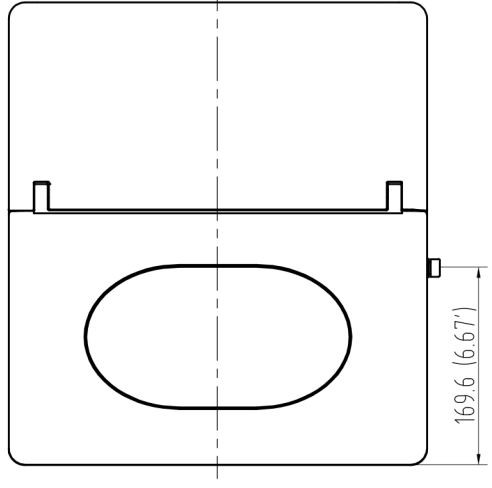

Drawn by:	SKU Code(s)
Date: 25/6/2019	G620
Sheet: 1	
Drawing Title: Polar Manual Fill ice cube maker (G620)	
Status Revision	1