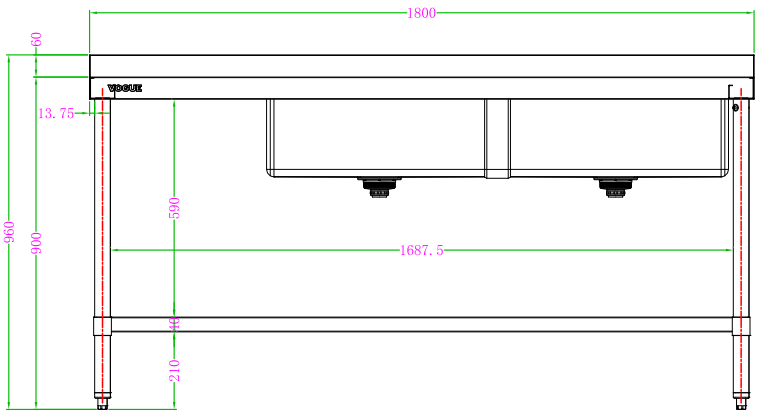
1800
60
13.75
960
900
590
1687.5
46
210

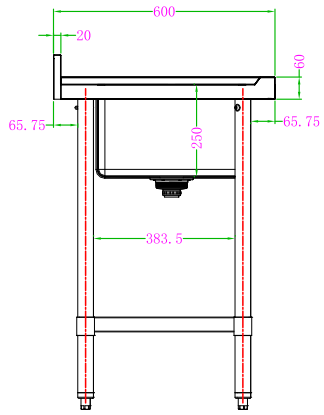
600
20
60
65.75
250
65.75
383.5

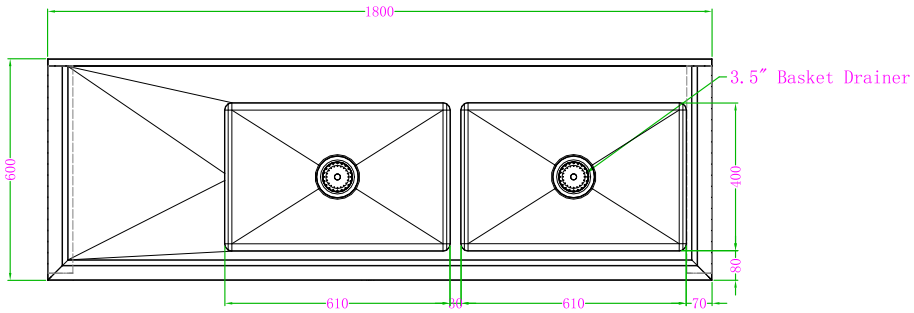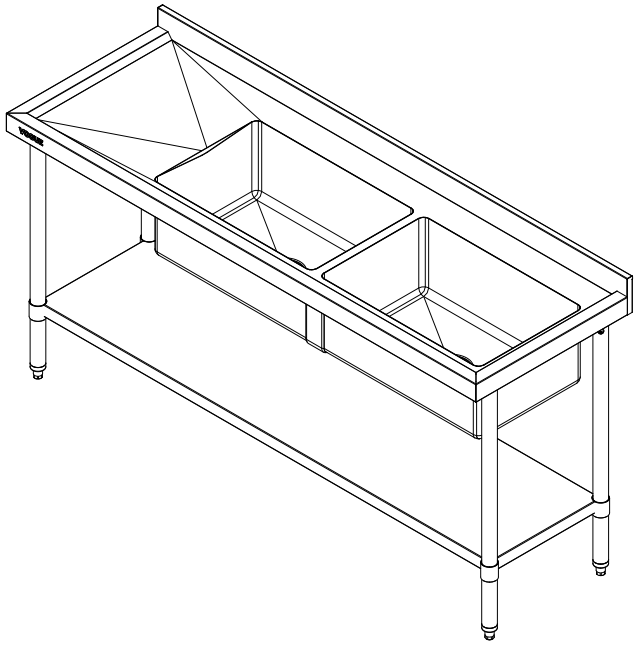
1800
3.5″ Basket Drainer
600
400
80
610
46
610
70